DuraPack® Python®

HIGH-PERFORMANCE AUTOMATED SIDE LOADER

OPERATION MANUAL

ISSUED JANUARY 2026

⚠ WARNING

Failure to follow all instructions and safety precautions in this manual, in the Service Manual, in other manufacturers' manuals and on the safety decals attached to the product could result in serious injury or death to operators or bystanders and/or damage to property.

DO NOT operate this vehicle before you READ and UNDERSTAND this Operation Manual, the Service Manual for this unit, other applicable manufacturers' manuals, and the safety decals on the product.

Each operator of this unit must read and understand all directions in this manual before they first operate this vehicle.

Keep this manual in the cab for new operators and to remind all operators about safe use.

© 2026 The Heil Co.

TP1DPPY-OM-0126

WARNING: Operating, servicing and maintaining equipment can expose you to chemicals including engine exhaust, carbon monoxide, phthalates, and lead, which are known to the State of California to cause cancer and birth defects or other reproductive harm. To minimize exposure, avoid breathing exhaust, do not idle the engine except as necessary, service your equipment in a well-ventilated area and wear gloves or wash your hands frequently when servicing your equipment. For more information go to **www.P65Warnings.ca.gov**.

WARNING: Handling equipment parts can expose you to chemicals such as phthalates and lead, which can cause cancer and reproductive harm. To minimize exposure, service the equipment in a well-ventilated area, wear gloves, and wash your hands. For more information see **www.P65Warnings.ca.gov**.

WARNING: Breathing diesel engine exhaust exposes you to chemicals known to the State of California to cause cancer and birth defects or other reproductive harm.

- Always start and operate the engine in a well-ventilated area.
- If in an enclosed area, vent the exhaust to the outside.
- Do not modify or tamper with the exhaust system.
- Do not idle the engine except as necessary.

For more information go to **www.P65warnings.ca.gov/diesel**.

READ THIS MANUAL!

EVERY PERSON who will **OPERATE, MAINTAIN, REPAIR, OR OTHERWISE WORK** with the Heil unit **MUST READ AND UNDERSTAND** this entire Operator's Manual before starting the engine or activating any switches or controls. **MAKE SURE** to read the Service Manual for the unit BEFORE you do any maintenance or repair procedures.

ALL USERS of this equipment must be trained professionals who understand how the machine operates and know how to avoid the risks associated with driving the vehicle and with picking up, compacting, and dumping refuse in an ever-changing traffic environment.

If you do not understand an operation or instruction, seek additional help or instruction from a qualified source BEFORE you operate the unit.

TABLE OF CONTENTS

INTRODUCTION **2**
How To Use This Manual 3
Product Variance *3*
Manual Sections *3*
Terminology *3*
Directives *3*
*Use of **Bold** and CAPITAL Letters* *3*
To The Owner 4
To The Operator 5
To The Mechanic 6
Warranty Claims And Inquiries 7
Models 7
Specifications 8
Serial Plate Locations 9
Reading The Serial Plate 10
Product Nomenclature 11
Lift Nomenclature 18
Glossary 19
SAFETY MESSAGES & DECALS **22**
Precautionary Statements 23
Decals 24
Reflective Safety Materials 24
Body And Cab Decal Placement 25
Body And Cab Decal Lists 29
Body And Cab Decal Images 31
Tailgate Decal Placement & List 43
Care Of Decals 46
General Instructions *46*
Pressure Washer Precautions *46*

Copyright 2025 The Heil Co.
Printed in the U.S.A.

TABLE OF CONTENTS

Pressure Washer Technique *47*
Alternative Cleaning Procedure *47*
LOCK-OUT/TAG-OUT PROCEDURE 48
Lock-Out/Tag-Out Procedure 49
Locking Out The Unit *50*
FEATURES, CONTROLS, SWITCHES, & ICONS 51
Features 52
InSight™ Diagnostic Display *52*
Auto-Lift Mode *52*
Select-O-Pack™ *52*
Auto/Manual Pack Mode *52*
Unit Interlocks 53
Operation Specifications 54
Pump System *54*
Packer *54*
Select-O-Pack *54*
Auto-Lift *55*
Warning Signals *56*
California Specific Warning Signals *56*
In-Cab Main Control Panel 57
In-Cab Display 58
Boot-Up Screen *58*
Customer Resource QR Code *59*
Notice Page *59*
Home Screen *60*
Settings Page *61*
On Route Screen *68*
Travel Screen *68*
Lights *69*

Copyright 2025 The Heil Co.
Printed in the U.S.A.

TABLE OF CONTENTS

Landfill Screen *70*
Body Health *71*
Out Of Dimension / Tailgate Status *72*
Telltale Banner *73*
Telltale Legend *73*
Alarm Pop-Up *76*
Python Lift Joystick Controls 77
BODY & TAILGATE PROPS 80
Propping The Body 81
Body Lifting Devices 81
Propping The Tailgate 82
Factory Tailgate Props *82*
DAILY CHECKLIST 84
Daily Checklist 85
Refuse Vehicle Daily Inspection 87
Checks And Inspection 88
BEFORE GOING ON ROUTE 95
Battery Disconnect Switch 96
Daily Checklist 96
Before Starting A Route 97
Hydraulic Oil Warm-Up Procedure 97
Use the Daily Checklist to Inspect the Unit *97*
Checking Hydraulic Oil 98
Preparing The Unit To Check The Hydraulic Oil Level *98*
Hydraulic Oil Level *98*
Cycle All Hydraulic Functions *98*
Hydraulic Oil Tank Nomenclature 99
Checking Travel Or “In-Transit” Position 100
ON-ROUTE OPERATION PROCEDURES 101

Copyright 2025 The Heil Co.
Printed in the U.S.A.

TABLE OF CONTENTS

Driving To Pick-Up Locations 102
Lifting And Loading Refuse With The Python Lift Arm 103
Auto-Lift Mode 103
Auto-Lift 103
Manual Lift Mode 104
Operator Proficiency 104
Compacting The Load 105
Select-O-Pack™ 105
Packing Near Full Load 105
Packing On-The-Move 105
Achieving Payloads 105
Leaving The Route For The Landfill / Transfer Station 106
LANDFILL / TRANSFER STATION /RECYCLE CENTER PROCEDURES 107
Setting Up An Eject Unit For Unloading 108
Set up the Unit 108
Raise the Tailgate 108
END OF DAY PROCEDURES 109
End Of Day Process 110
Parking the Unit 110
Final Inspection 110
Reports to Employer/Supervisor 110
Ignition Keys 110
PREVENTIVE MAINTENANCE CHART 111
Body Preventive Maintenance Chart 112
LUBRICATION GUIDE 114
Body Lubrication Guide 115
Lift Arm Lubrication Guide 116
Index 117
HEIL Environmental Warranty Statement 120

Copyright 2025 The Heil Co.
Printed in the U.S.A.

DuraPack® Python®

HIGH-PERFORMANCE AUTOMATED SIDE LOADER

OPERATION MANUAL

ISSUED JANUARY 2026

TP1DPPY-OM-0126

Issued January 2026

Copyright 2026 The Heil Co.
Printed in the U.S.A.

SECTION 1
INTRODUCTION

Copyright 2026 The Heil Co.
Printed in the U.S.A.

HOW TO USE THIS MANUAL

Product Variance

This manual may cover options not included on your unit. Also, the location and appearance of the controls on your unit may be different than those shown in this manual. Make sure you know the location of the controls and how to properly operate the controls on your unit before operation.

Manual Sections

This manual is divided into several sections.

- Introduction
- Safety Messages and Decals
- Lock-Out/Tag-Out Procedures
- Features, Controls, Switches, and Icons
- Body and Tailgate Props
- Daily Checklist
- Before Going on Route
- On-Route Operation Procedures
- Landfill/Transfer Station/Recycle Center Procedures
- End of Day Procedures
- Preventive Maintenance Chart
- Lubrication Guide

Terminology

This manual uses terminology that is defined in the **“Glossary” on page 20**.

Directives

When we give directions for using the equipment, we capitalize key words. These words are usually a command followed by a result.

For example, “MOVE the body eject switch to PUSH ...”.

*Use of **Bold** and CAPITAL Letters*

We also put some words in **BOLD AND CAPS** for emphasis, usually related to safety or something of other importance, such as “**MAKE SURE** you close the side doors”.

We put some words in just bold for emphasis, such as “All warranty repairs must be performed by …”.

Each DANGER, WARNING, and CAUTION notice precedes its applicable text.

Copyright 2026 The Heil Co.
Printed in the U.S.A.

TO THE OWNER

This manual is designed to help ensure safe, efficient and proper operation of The Heil Co. d/b/a Heil Environmental (“Heil”) DuraPack Python Automated Side Loader (ASL) refuse collection vehicle (or the unit).

The manual will familiarize you with the unit and will give you proper operating procedures and tips.

For chassis operation and maintenance instructions, see the Chassis Owner’s Manual and the DuraPack Python Service Manual.

As the owner, you have several responsibilities:

- You must complete and return the warranty registration for the unit to Heil.
- You must make sure that each operator has the proper driver’s license.
- You must make sure that the operator does not operate the unit under the influence of drugs or alcohol.
- You must make sure that the unit is properly maintained to meet all local, state and federal requirements along with FMCSA (Federal Motor Carrier Safety Administration) and DOT (Department of Transportation) .
- You must keep the vehicle maintained and properly adjusted to meet the manufacturer’s standards and recommendations.
- You must keep accurate records of daily inspections, breakdowns, malfunctions, maintenance and repairs of the unit.
- You must make sure that repairs are made that may affect the safe operation of the unit before it is made available for operation.
- You must provide adequate lighting on the unit for safe operation under low light or night conditions.
- You must provide adequate training for each operator and mechanic that will operate the unit BEFORE an operator goes on route or BEFORE a mechanic performs maintenance or repair procedures.
- You must determine if an operator or mechanic has difficulties reading or understanding this manual. When a person has difficulties reading or understanding this manual, you must provide adequate assistance so that the person does understand the material in this manual.
- You must make sure that each operator uses the equipment on a route as given in the instructions of this manual and other manufacturers’ manuals.
- You must provide on-going training for each operator and mechanic that operates the unit.
- You must make sure that this manual stays with the vehicle at all times.

Properly operated and maintained, your DuraPack Python unit should give you years of low-cost, trouble free service.

Copyright 2026 The Heil Co.
Printed in the U.S.A.

TO THE OPERATOR

⚠ DANGER

Do not operate the unit or perform repair or maintenance procedures on the unit until you read and understand all of the instructions in this manual. Failure to do so may result in injury or death to operators or bystanders.

NOTICE

For Compressed Natural Gas (CNG) units, use this Operation Manual together with the CNG System Manufacturer's Operation and Maintenance Manuals. Always read and understand those manuals along with the Heil Service Manual and Heil Operation Manual.

As the operator of the unit, you have several responsibilities:

- You must understand and follow all manufacturers' instructions for equipment operation.
- You must observe pertinent laws and regulations.
- Read and understand all procedures in this Operation Manual before operating the unit. If you have trouble reading or understanding the manual, notify the owner or designated person immediately. Do not operate the unit until you fully understand its procedures and requirements.
- You must receive proper training before you operate (or service and maintain) the unit. If you have not been trained, you must inform the owner.
- You must perform a daily inspection of the unit before you go on route. Refer to **"Daily Checklist" on page 85**.
- You must make sure that all decals and labels are clean and readable.
- You must report to the owner (or the designated person) any and all deficiencies, malfunctions or problems you find during the daily inspection.
- You must read, understand and obey all safety messages and decals that are on the outside or in the cab of the unit.
- Always use your employer's Lock-Out/Tag-Out procedures. If your employer does not have Lock-Out/Tag-Out procedures, use the **"Lock-Out/Tag-Out Procedure" on page 49**.
- Before you start the engine or operate the unit for the first time
- You must clear the area of other people.
- YOU MUST learn and practice safe use of all controls and indicators before operating the unit on a collection route or performing repair or maintenance.
- Before each time you start the engine or operate the unit, you must clear the area of other people.
- Before you operate the unit in reverse, you must make sure the area behind the unit is clear of other people, vehicles or other obstructions.
- You must make sure the unit is on hard, stable ground when you unload refuse at the landfill or transfer station.

Copyright 2026 The Heil Co.
Printed in the U.S.A.

TO THE MECHANIC

⚠ WARNING

Do not operate the unit or perform repair or maintenance procedures on the unit until you read and understand all of the instructions in this manual. Failure to do so may result in injury or death to operators or bystanders and/or damage to the unit or other property.

NOTICE

If you do not understand a procedure or instruction, tell the owner or the designated person immediately. Do not operate the unit if you do not understand all procedures and instructions in this manual. The owner or designated person can contact your Heil dealer or Heil for additional help. See **"Customer Service & Repair Parts Contact" on page 121.**

As the mechanic of the unit, you have several responsibilities:

- You must understand and follow all manufacturers' instructions for equipment operation.
- You must observe pertinent laws and regulations.
- You must read, study and understand all procedures and requirements of this Operation Manual and the Service Manual applicable to your truck before you operate the unit for the first time.
- If you do not understand or have difficulty reading this manual or the Service Manual applicable to your truck, you must tell the owner or designated person before you operate or service the unit.
- DO NOT operate or service the unit until you understand the procedures and requirements of the Operation Manual and the Service Manual applicable to your truck.
- You must receive proper training before you operate or service and maintain the unit. If you have not been trained, you must inform the owner.
- You must read, understand, and obey all safety messages and decals that are on the outside or in the cab of the unit.
- Always use your employer's Lock-Out/Tag-Out procedures. If your employer does not have Lock-Out/Tag-Out procedures, use the **"Lock-Out/Tag-Out Procedure" on page 49**.
- Before you start the engine or operate the unit for the first time:
  - You must clear the area of other people
  - You must learn and practice safe use of all controls and indicators before you operate the unit or before you do repair or maintenance procedures.
- Before you operate the unit in reverse, you must make sure the area behind the unit is clear of other people, vehicles or other obstructions.

Copyright 2026 The Heil Co.
Printed in the U.S.A.

TO THE MECHANIC

⚠ WARNING

A unit that needs service or repair can malfunction and create a dangerous condition. A part failure during operation can cause SERIOUS INJURY or DEATH to a person or damage to the unit. Repair or replace any failed or defective part immediately.

WARRANTY CLAIMS AND INQUIRIES

The HEIL ENVIRONMENTAL WARRANTY STATEMENT is printed on the inside, back cover of this manual. Should a failure occur that is covered by this warranty, contact the nearest Heil dealer for warranty repair unless otherwise authorized by Heil.

For all parts, warranty claims, and inquiries, please give the dealer or service center the unit's model and serial number located on the body serial plate. See **"Serial Plate Locations" on page 9** for the location of the body serial plate.

MODELS

The DuraPack Python has two body models:

- Service Hoist
- Serviceable Eject (Service Lift)

Service Hoist, and Serviceable Eject (Service Lift) models use a Packer/Eject panel and two cylinders to compact the refuse from the hopper into the body (packer mode) and to push all of the refuse from the body.

The Serviceable Eject (Service Lift) body models do not have Service Hoist Cylinders. The Serviceable Eject (Service Lift) body model requires an external hoist and cable to raise the body a short distance for service and maintenance operations.

The Service Hoist body model is an Eject body with two service hoist cylinders to raise the body a short distance for service and maintenance operations.

Copyright 2026 The Heil Co.
Printed in the U.S.A.

SPECIFICATIONS

A. Hydraulic Cylinders

Lift and Reach.....3.1” Bore X 16” Stroke

Grab.....3.1” Bore X 8” Stroke

Level.....2.48” X 14.48” Stroke

B. Body

Main Relief.....2500 PSI

CNrG® Tailgate Raise.....1500 PSI

C. Lift Valve

Main Relief Valve Pressure.....2300 PSI

Reach In/Out .....2500/1250 PSI

Reach Relief In/Out.....2500/1250 PSI

Arm Up/Down.....2500/1250 PSI

Packer Pressure Switch.....2200 PSI

D. Grabber

Relief.....1250/1250 PSI

E. Cycle Times

Lift Cycle Time Standard Python.....7 - 9 Seconds

Packer Cycle Time.....12-16 Seconds

F. Lift Capacity (@700 RPM idle)

Standard Python - at the body.....800 lbs

Standard Python - 6 Feet and Beyond.....645 lbs

Hydraulic Pump....31 GPM @ 750 RPM @ 2500 PSI

Copyright 2026 The Heil Co.
Printed in the U.S.A.

SERIAL PLATE LOCATIONS

You determine the sides of the unit by facing the direction of forward travel. The left side is the street side and the right side is the curb side. The figure below shows the location of the serial plate on the streetside of the unit's body. See **"Reading The Serial Plate" on page 10** for a description of the information that is on the serial plate.

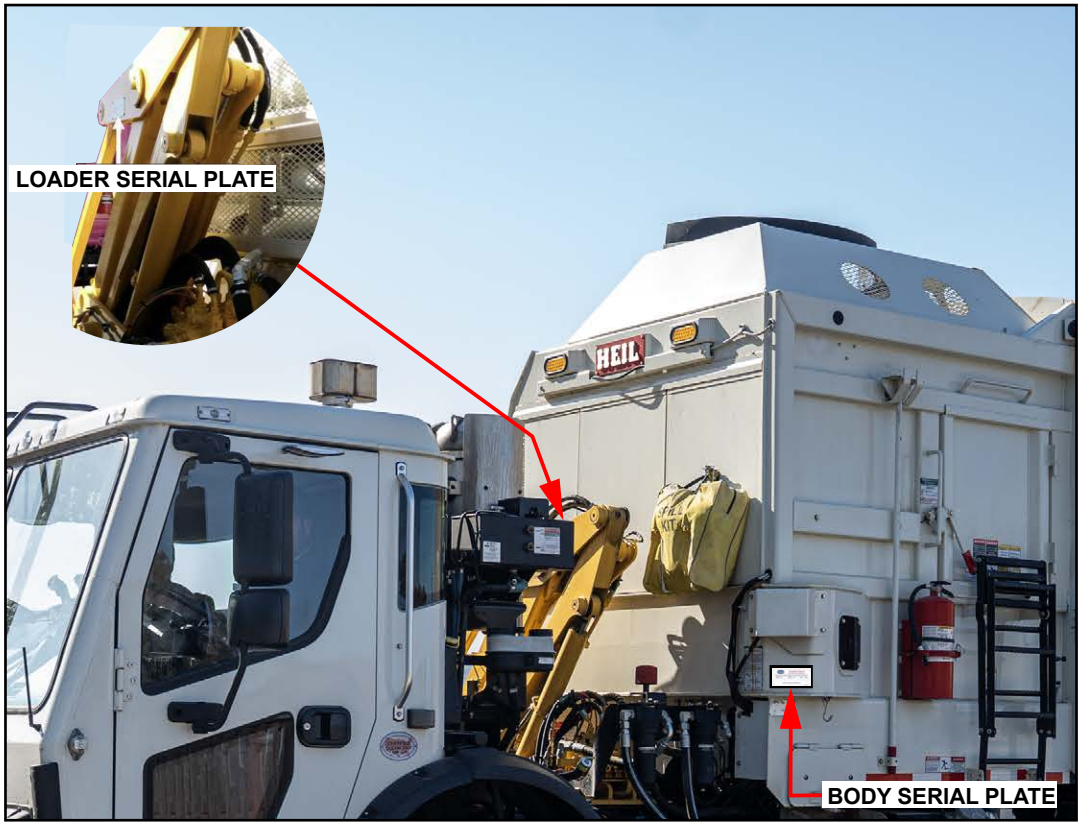

Figure 1. Serial Plate Locations

Copyright 2026 The Heil Co.
Printed in the U.S.A.

READING THE SERIAL PLATE

The serial plate is the “birth certificate” of the unit. See the figure below.

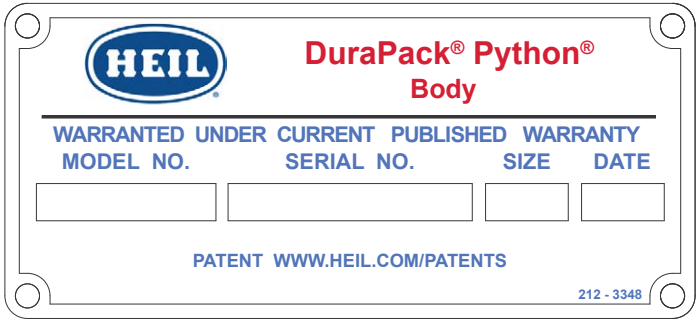

Figure 2. Serial Plate

Information stamped in the boxes on the serial plate indicates:

Model number:

406-nnnn (“n” is any single-digit number)

Unit’s unique serial number

Body size (cu. yd.)

Date of manufacture (last number of the year followed by the number of the day of the year, e.g. T020 is year 2026 and the 20th day of 2026).

NOTICE

The code for the year of manufacture is in accordance with FMVSS 115. See the following table.

Year of Manufacture			
Year Code	Year	Year Code	Year
T	2026	6	2036
V	2027	7	2037
W	2028	8	2038
X	2029	9	2039
Y	2030	10	2040
1	2031	11	2041
2	2032	12	2042
3	2033	13	2043
4	2034	14	2044
5	2035	15	2045

Copyright 2026 The Heil Co.
Printed in the U.S.A.

PRODUCT NOMENCLATURE

The figure below shows the major components and their typical location on the unit. See the following pages for brief descriptions of each component shown below.

Note: Options may be shown in the image below, and all corresponding images within this manual.

Figure 3. Product Nomenclature

Copyright 2026 The Heil Co.
Printed in the U.S.A.

PRODUCT NOMENCLATURE

The figure below shows the major components and their typical location on the unit. See the following pages for brief descriptions of each component shown below.

Note: Options may be shown in the image below, and all corresponding images within this manual.

Figure 4. Product Nomenclature

Copyright 2026 The Heil Co.
Printed in the U.S.A.

PRODUCT NOMENCLATURE

Hydraulic Pump - The unit's hydraulic pump provides the oil flow for the hydraulic system. It is located either in front of the unit's engine or underneath the unit, powered by the transmission through a Power Take-Off (PTO). Depending on the pump and PTO combination, hydraulic oil may flow through the system when the pump is off, however, the operator controls are inoperative and the system hydraulic oil pressure is not sufficient to operate the unit's functions.

⚠ WARNING

Moving equipment can be dangerous to bystanders. SERIOUS INJURY or DEATH can occur if a person is in the area of operation or is not attentive to the operations. Clear the area of all unnecessary people before you operate the controls.

Cab Controls – The standard cab control panel is located in the vehicle cab. See **"FEATURES, CONTROLS, SWITCHES, & ICONS" on page 51** for the different controls that may be installed in your unit. The standard and optional lift arm controls are located in the cab.

Lift Arm – Use the loader's lift arm to pick up and dump refuse from a refuse container into the hopper. (The loader is the assembly that includes the lift arm, the grabber assembly, hoses and other parts.) The operator can do this either inside the cab with the standard rocker switches, optional rocker switches or an optional joystick.

⚠ DANGER

Do not enter the hopper unless the unit is in the **"Lock-Out/Tag-Out Procedure" on page 49**. When the unit is not in the Lock-Out/Tag-Out, the packer/ejector panel can be operated. DEATH or SERIOUS INJURY will occur if the packer/ejector panel moves while a person is in the hopper.

Hopper – The hopper is the front part of the body assembly. The packer panel is in the hopper. The hopper is the loading chamber for the refuse. Refuse dumped into the unit falls inside the hopper where it is moved by the packer panel into the body.

Copyright 2026 The Heil Co.
Printed in the U.S.A.

PRODUCT NOMENCLATURE

Body – The body contains the compacted refuse until you dump the refuse at the landfill. DO NOT enter the body from the hopper.

Body Props – Always use both body props, one on each side of the unit, when you raise the body for maintenance or service procedures.

⚠ WARNING

Make sure hopper area is clear of people on both sides of unit before starting packer cycle. The packer completes cycle(s) when ANY packer EXTEND icon is “ON” or when AutoPack™ is “ON” and cart lowers from hopper. SERIOUS INJURY or DEATH can occur if any part of your body is in the hopper when the packer panel is in motion.

Packer/Eject Panel & Cylinders – The packer/eject panel is inside the hopper (at the front of the hopper) and has two functions:

The packer function compacts the loaded refuse from the hopper into the body (packer mode)

The eject function pushes the loaded refuse out of the body (eject mode) through the open tailgate.

During the PACKER mode, you extend the packer/eject panel cylinders to push the packer panel towards the rear of the body, which compacts the load.

The packer panel has a follower panel, so the operator can dump a container into the hopper no matter where the packer is in the pack cycle.

Normal operation of the AutoPack feature consists of one extension and retraction of the packer panel.

During the EJECT mode, you use the packer/eject panel and cylinders to remove the refuse from the body.

On the Eject and Service hoist models when the tailgate is open, the EJECT mode lets the packer/eject panel travel further than during the packer mode. This extra travel of the panel removes ALL of the refuse from the body. The service hoist is not to be used to eject the body.

⚠ DANGER

Before entering the hopper/body area, place the unit in Lock-Out/Tag-Out (see **“Lock-Out/Tag-Out Procedure” on page 49**). SERIOUS INJURY or DEATH will occur if any part of your body is in the hopper when the packer panel is in motion.

Copyright 2026 The Heil Co.
Printed in the U.S.A.

PRODUCT NOMENCLATURE

DANGER

The side door must be closed before you start a packer operation. SERIOUS INJURY or DEATH will occur if a person is inside the body or hopper. Make sure no one is inside the hopper or body before you close the door and begin a packer function.

Side Access Door – Use this street side door to enter the body when required for cleaning or other maintenance tasks. MAKE SURE the unit has been Locked-Out/Tagged-Out and the keys stored in a secured location BEFORE you enter through the side door.

DANGER

Always prop a tailgate when you have it raised for maintenance, service, or cleaning procedures. Always utilize the tailgate props according to specifications when propping the tailgate (see **“Propping The Tailgate” on page 82**). Any part of your body between the unit’s body and the tailgate while you prop the tailgate or when the tailgate is propped is dangerous. SERIOUS INJURY or DEATH will occur if any part of your body is between the tailgate and the body if the tailgate suddenly closes.

Sump Doors – A sump door needs to be open when cleaning out the sump area.

Tailgate Props – Always use both tailgate props (see **“BODY & TAILGATE PROPS” on page 80)**, one on each side of the unit, when you raise the tailgate for maintenance or service procedures.

Tailgate Cylinders – You use these cylinders to RAISE the tailgate before you unload the compacted refuse at the landfill. After you unload the refuse, you use the cylinders to LOWER the tailgate.

Tailgate Latches – The tailgate’s lock status is shown by a indicator light on the in-cab display screen. The icon illuminates when the tailgate is open, unlocked, or not fully locked. When the tailgate is locked the indicator icon is off. See **“BODY & TAILGATE PROPS” on page 80**.

Tailgate Lock Cylinders – Heil’s patented Shur-Lock™ system uses tailgate lock cylinders to UNLOCK the tailgate before you RAISE the tailgate and to LOCK the tailgate after you LOWER the tailgate.

Copyright 2026 The Heil Co.
Printed in the U.S.A.

PRODUCT NOMENCLATURE

DANGER

A tailgate in motion is dangerous. SERIOUS INJURY or DEATH will occur if a person is struck by a moving tailgate or becomes trapped between the tailgate and the body. Clear the area near the tailgate of all unnecessary people before you lower the tailgate.

Tailgate – Raise the tailgate at the landfill or transfer station to unload the refuse.

An red indicator on the in-cab display and an audible alarm inside the cab let the operator know when the tailgate is raised. The red indicator illuminates (is “ON”) and the alarm sounds when the tailgate is RAISED. The indicator is “OFF” and the alarm stops when the tailgate is CLOSED.

NOTICE

You must use the tailgate lock cylinder (described previously) to unlock the tailgate in order to raise the tailgate or to fully close (lock) the tailgate.

DANGER

Keep all parts of your body out from underneath the unit’s body and away from the cylinders when raising or lowering the body. SERIOUS INJURY or DEATH will occur if the unit’s body suddenly lowers and traps a part of your body.

NOTICE

Always unload refuse from the body before you raise it for maintenance or service procedures. Refuse in the body can make the unit unstable. Always use the body props when you raise the body for maintenance or service procedures.

WARNING

Raising the body with the tailgate closed can damage the underride bumper. The underride bumper can hit the ground when the tailgate is not fully raised before you raise the body. SERIOUS INJURY or DEATH may occur and also cause damage to the unit.

Copyright 2026 The Heil Co.
Printed in the U.S.A.

PRODUCT NOMENCLATURE

You also RAISE the body with these cylinders to perform service or maintenance on the unit. When you do service or maintenance with the body raised, ALWAYS use the body props. After completion of the service or maintenance procedures, always LOWER the body until it rests on the chassis.

Mobile Controller – The unit has a Mobile Controller. The Mobile Controller monitors critical components and controls operation of the various functions. When the Mobile Controller detects a fault or unsafe condition, it alerts the operator with an indicator light and/or a buzzer alarm. During certain conditions, the Mobile Controller will not allow operation of all functions.

Hydraulic Oil Tank - The tank is the reservoir for the hydraulic oil which operates all hydraulic cylinders described in this manual.

NOTICE

Operating the unit's controls with a suspended load, such as a raised tailgate or a container on a lift mechanism, will allow the load to move even when the hydraulic pump is OFF.

Operator Controls – The standard operator controls for running the components are inside the vehicle cab. See **"FEATURES, CONTROLS, SWITCHES, & ICONS" on page 51** for the different controls that may be installed in your unit.

Copyright 2026 The Heil Co.
Printed in the U.S.A.

LIFT NOMENCLATURE

The figure below shows the major components of the lift arm.

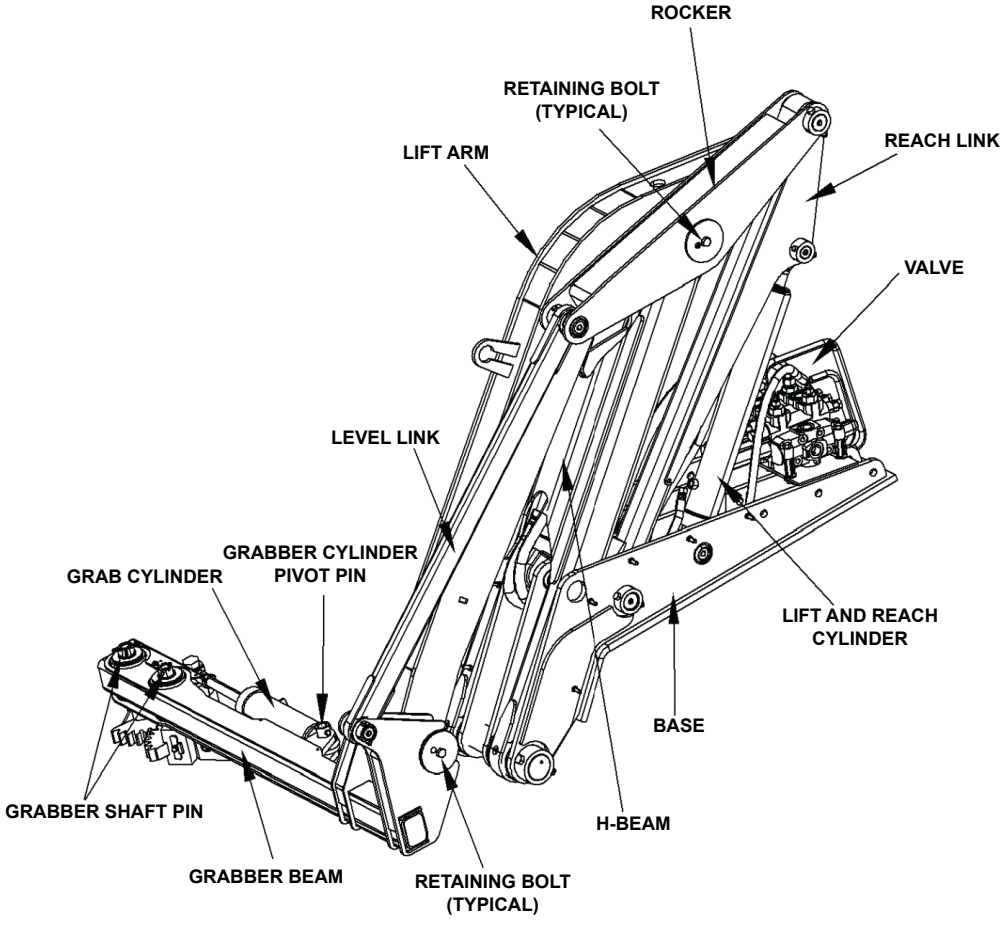

Figure 5. Lift Nomenclature

Copyright 2026 The Heil Co.
Printed in the U.S.A.

GLOSSARY

TERM	DEFINITION
accident	An incident that results in unintended harm.
AUTO	The command to select the AutoPack feature.
bin	The refuse collection container
body	The complete body assembly or the area of the body where the refuse is stored.
CAUTION	Indicates a hazardous situation which, if not avoided, could result in minor or moderate injury.
collapsed position	The fully retracted position of a cylinder
Mobile Controller	Heil Electronic Body Controller
Auto-Lift	A feature of the Python loader that automatically lifts and dumps a container, then automatically removes the container from the hopper and brings the lift arm down.
DANGER	Indicates a hazardous situation which, if not avoided, will result in death or serious injury.
extend/EXTEND	Make a cylinder rod move out its base / Command to move the packer panel towards the body
fully retracted position	The packer/extend cylinder is fully retracted and the packer panel is all the way to the front of the hopper. May also be referred to as “Home Position” or “Front Head”.
grabber	The entire grabber assembly or the grabber arms.
GRIP	The command to close the grabber arms around a refuse container.
harm	An action that causes death, injury or property damage.
hazard	A potential source of harm.
hopper	The loading chamber of the unit in front of the packer panel where you dump the refuse material.

Copyright 2026 The Heil Co.
Printed in the U.S.A.

GLOSSARY

TERM	DEFINITION
illuminate	Make a lamp shine light (the lamp is on).
incident	An unintended and undesired event that has the potential to harm.
interlock	A safety mechanism that disables a function or action.
LATCHED	The condition when the tailgate is fully CLOSED, thereby locking the tailgate.
LOCK	Command to use the tailgate lock/unlock switch and lock the tailgate lock cylinders.
must	The action is mandatory.
NOTICE	Alerts you to practices not related to personal injury, such as damage to the unit or other equipment.
off/OFF	When a light or lamp does not illuminate / The position of a switch or other control to stop a function
on/ON	When a light or lamp illuminates / The position of a switch or other control to start a function
operator	Any person who uses the unit and its equipment. One who controls the operation of various unit accessories and mechanisms, loads material, performs functions such as operating the loader, cart tipping and packing of wastes or recycled products, and who may also drive the unit along the route during the collection process. The operator may also be the driver.
PN	Part Number
PTO	Power Takeoff
retract/RETRACT	Make a cylinder rod go into its base / Command to move the packer panel towards the hopper
RPM	Revolutions Per Minute
The Select-O-Pack™	The Select-O-Pack feature allows the operator to set the number of lift cycles before automatic operation of the packer.

Copyright 2026 The Heil Co.
Printed in the U.S.A.

GLOSSARY

TERM	DEFINITION
side access door	The side access door is located on the street side of the unit. This is the preferred access into the body. ALWAYS Lock-Out/Tag-Out the unit BEFORE entering the body.
unit	DuraPack Python refuse collection vehicle referred to in this manual.
UNLATCHED	The side access door is not closed or secured.
UNLOCK	Command to use the tailgate lock/unlock switch and unlock the tailgate lock cylinders
WARNING	Indicates a hazardous situation, which if not avoided, could result in death or serious injury.

Copyright 2026 The Heil Co.
Printed in the U.S.A.

SECTION 2
SAFETY MESSAGES & DECALS

Copyright 2026 The Heil Co.
Printed in the U.S.A.

PRECAUTIONARY STATEMENTS

Read this entire manual, especially this safety section, before you operate the vehicle. Failure to follow these important precautions could result in serious injury, death, or property damage.

This safety alert symbol indicates important safety messages in this manual and on safety decals attached to the equipment. Make sure you read all of these messages and follow the instructions and precautions.
DANGER

In the general text of the manual and in the safety labels attached to the product, signal words indicate the type and seriousness of risk that you could encounter if you do not follow the precautions. The signal words and their definitions follow:

DANGER

DANGER indicates a hazardous situation which, if not avoided, WILL result in DEATH or SERIOUS INJURY.

WARNING

WARNING indicates a hazardous situation which, if not avoided, COULD result in DEATH or SERIOUS INJURY.

CAUTION

CAUTION indicates a hazardous situation which, if not avoided, COULD result in MINOR or MODERATE INJURY.

NOTICE

NOTICE addresses practices not related to personal injury, such as property damage or damage to the equipment.

The following pages provide a summary of some of the more important safety precautions that are in this manual. There are additional safety precautions in other sections of this manual that are not contained in this section. You must also read, understand and follow those messages.

Copyright 2026 The Heil Co.
Printed in the U.S.A.

DECALS

NOTICE

Replace any decal with a new decal if the old decal is lost, destroyed, painted over or cannot be read. When you replace a part that had decals, make sure you install new decals on each new part. Decal part numbers can be found below and in the Parts Manual. You can purchase replacement decals from your **Heil Dealer** or from the **Heil Parts Central**, **800- 528-5308**.

REFLECTIVE SAFETY MATERIALS

Refer to the **Electronic Parts Catalog (EPC)** for the location and part numbers of the reflective safety materials on the unit.

NOTICE

Replace any safety material with new safety material if the old safety material is lost, destroyed, painted over or cannot be seen. When you replace a part that had safety material on it, make sure you install new safety material on the new replacement part. You can purchase replacement decals from your **Heil Dealer** or from the **Heil Parts Central, 800-528-5308**.

Copyright 2026 The Heil Co.
Printed in the U.S.A.

BODY AND CAB DECAL PLACEMENT

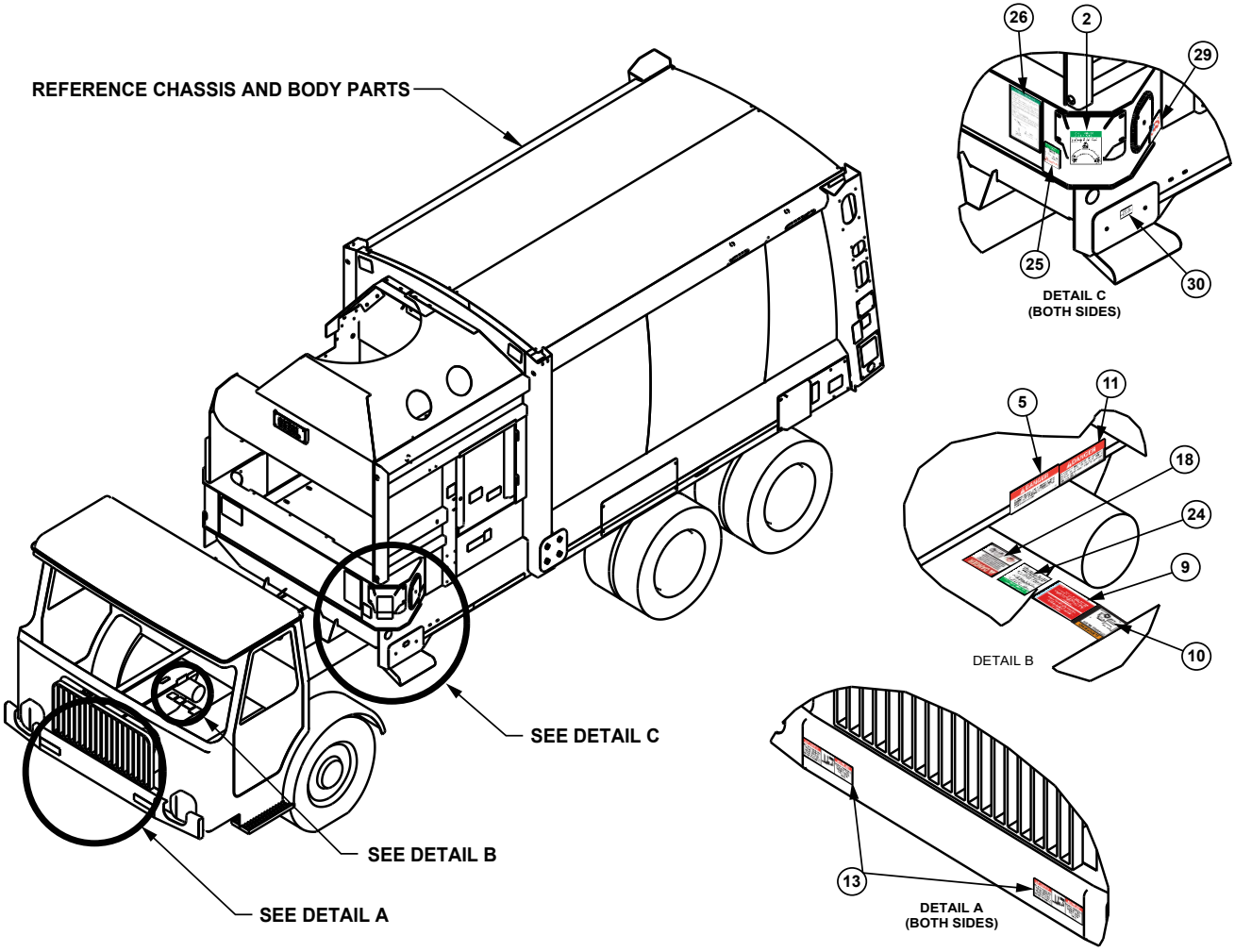

Figure 6. Body & Cab Decal Placement

Copyright 2026 The Heil Co.
Printed in the U.S.A.

BODY AND CAB DECAL PLACEMENT

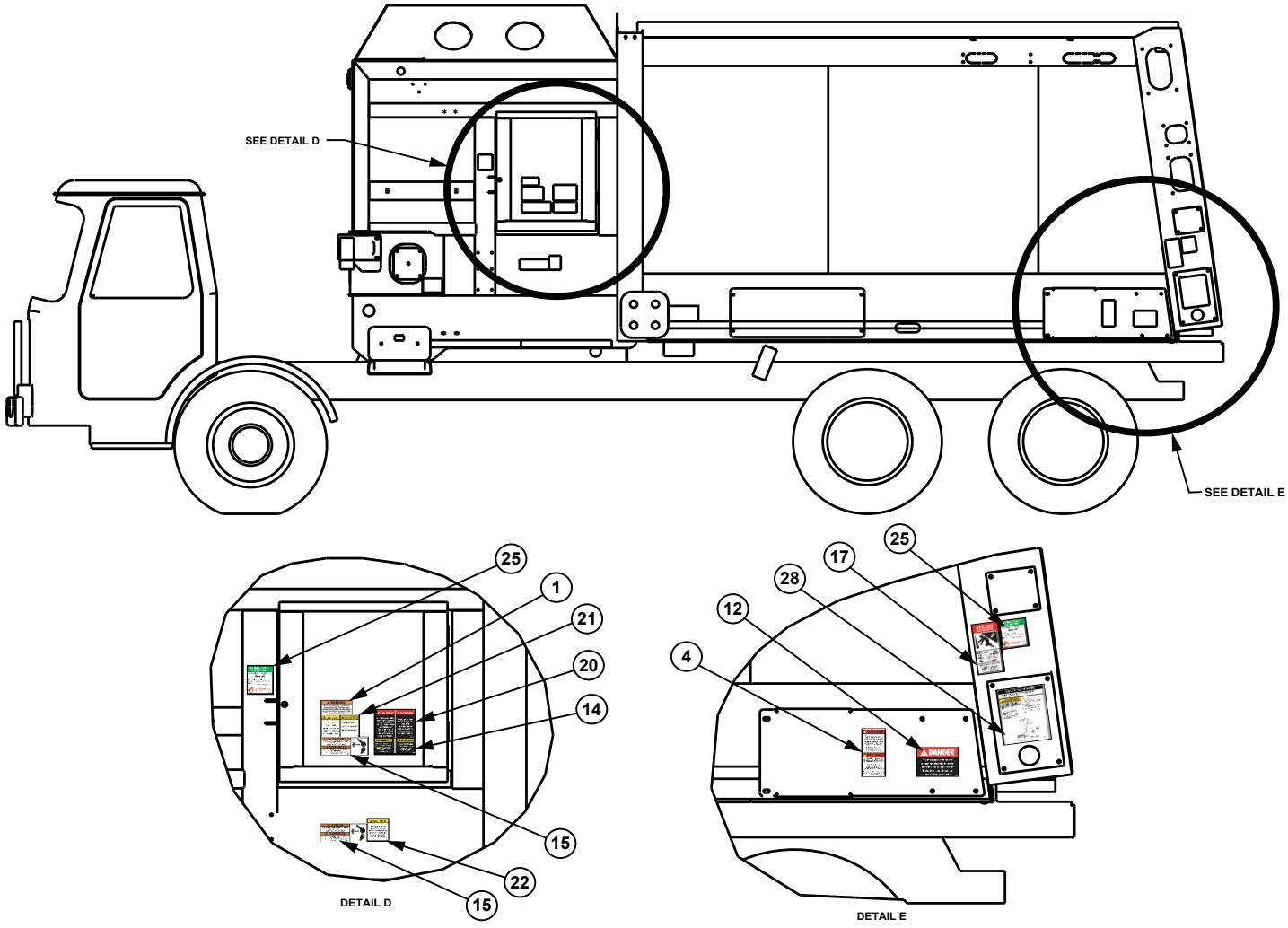

Figure 7. Body & Cab Decal Placement

Copyright 2026 The Heil Co.
Printed in the U.S.A.

BODY AND CAB DECAL PLACEMENT

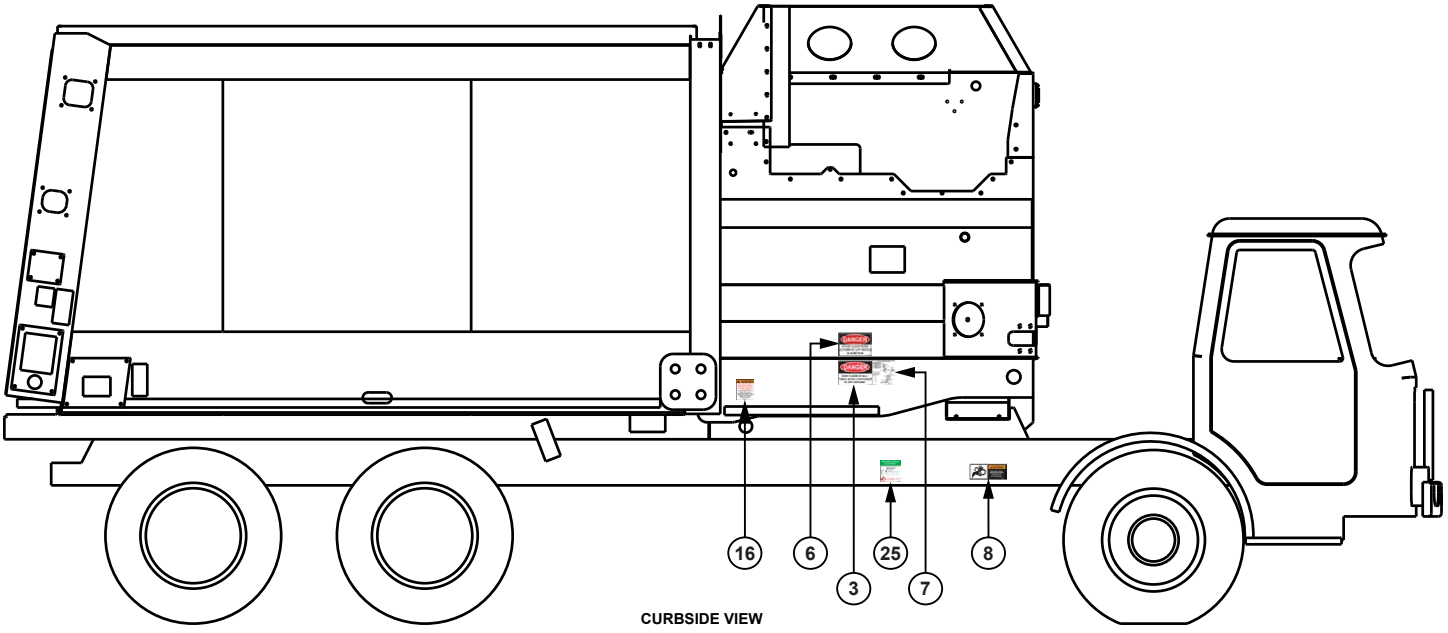

Figure 8. Body & Cab Decal Placement

Copyright 2026 The Heil Co.
Printed in the U.S.A.

BODY AND CAB DECAL PLACEMENT

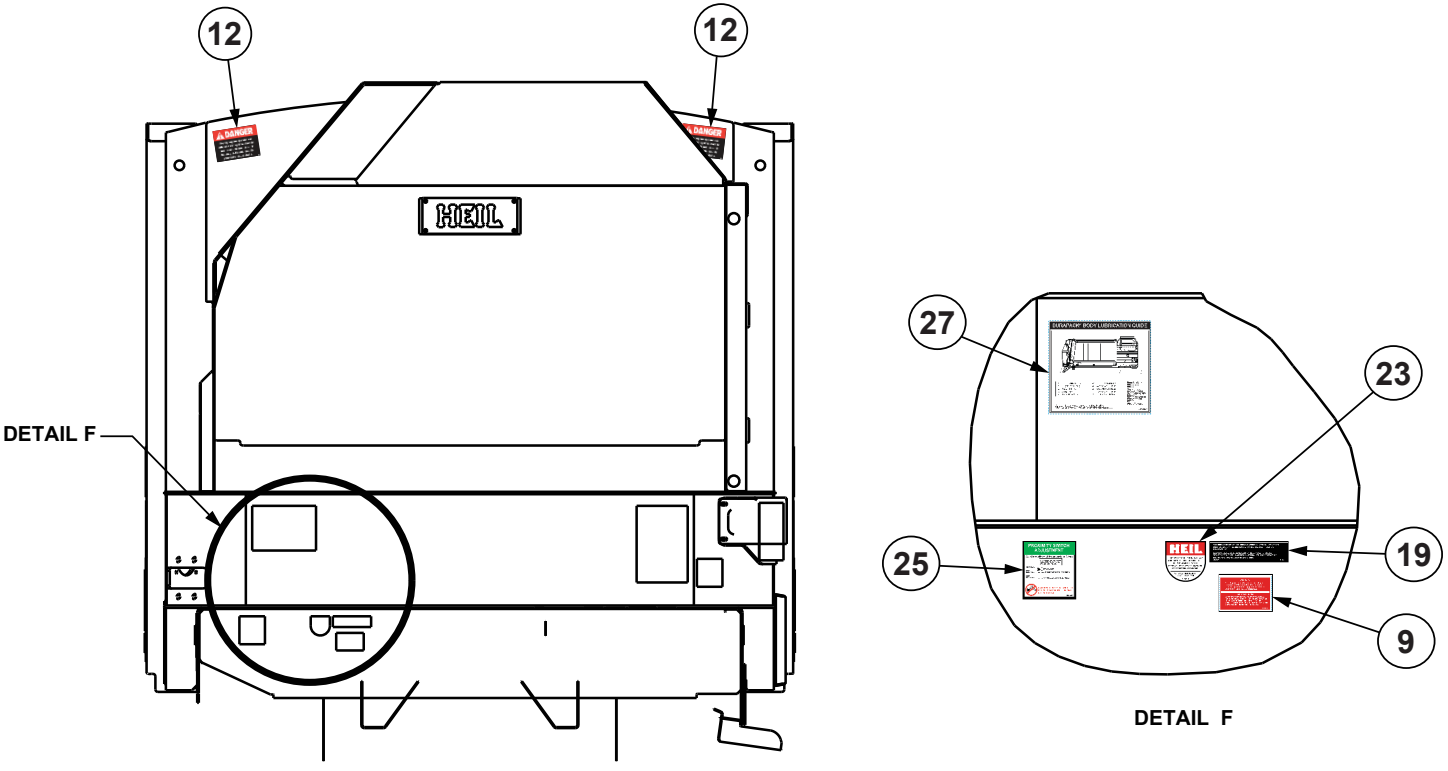

Figure 9. Body & Cab Decal Placement

Copyright 2026 The Heil Co.
Printed in the U.S.A.

BODY AND CAB DECAL LISTS

ITEM	PART NO.	DESCRIPTION	QTY
	490-0062-001	KIT, DECAL	
1	212-3287	DECAL, WARNING, DAILY INSPECTION FORM	1
2	212-3298	DECAL, ARC SENSOR ADJUSTMENT	1
3	212-0980	DECAL, DANGER CONTAINER OFF GROUND	1
4	212-3062	DECAL, TAILGATE PROPS OPERATION	2
5	212-1104	DECAL, DANGER, ELEVATED BODY	1
6	212-1242	DECAL, DANGER LIFT IN MOTION	1
7	212-2920-002	PYTHON LIFT LUBRICATION GUIDE	1
8	212-1330	DECAL, WARNING	1
9	212-1783	DECAL, OPER. MANUAL WARNING	2
10	212-1584	DECAL, HEIGHT	1
11	212-1626	DECAL, DANGER, RAISE T/G BEFORE BODY	1
12	212-1642	DECAL, DANGER - HOPPER AND T/G OPENING	4
13	212-1764	DECAL, DANGER, DO NOT ENTER UNDER...	2
14	212-1780	DECAL, CAUTION-SIDE DOOR	1
15	212-1781	DECAL, CAUTION-STOP ENGINE	2
16	212-2875	DECAL, WARNING BATTERY	1
17	212-1801	DECAL, DANGER - STAND CLEAR	2
18	212-1820	DECAL, DANGER - TOWING - IN CAB	1
19	212-1841	DECAL, ANSI SPECIFICATIONS	1
20	212-1907	DECAL, DANGER, ACCESS DOOR	1
21	212-1911	DECAL, CAUTION PANEL IN MOTION	1

Copyright 2026 The Heil Co.
Printed in the U.S.A.

BODY AND CAB DECAL LISTS

ITEM	PART NO.	DESCRIPTION	QTY
22	212-1914	DECAL, CAUTION - LADDER	1
23	212-1915	DECAL, WARRANTY PARTS #	1
24	212-1918	DECAL, SAFETY INSTRUCTIONS	1
25	212-2228	DECAL, PROX. SWITCH ADJUSTMENT	6
26	212-2338	DECAL, PACKER/EJECTOR ADJ.	1
27	212-3624	DECAL, LUBRICATION	1
28	212-2811	TAILGATE PROP DECAL	2
29	212-2689	DECAL, FLAG	1
30	212-2605	DECAL, SUMP DOOR	1
*	212-1103	DECAL, DANGER, EMPTY BODY BEFORE RAISING, LG (*NOT SHOWN)	2
*	212-1329	DECAL, BODY PROP OPERATION (*NOT SHOWN)	2

Copyright 2026 The Heil Co.
Printed in the U.S.A.

BODY AND CAB DECAL IMAGES

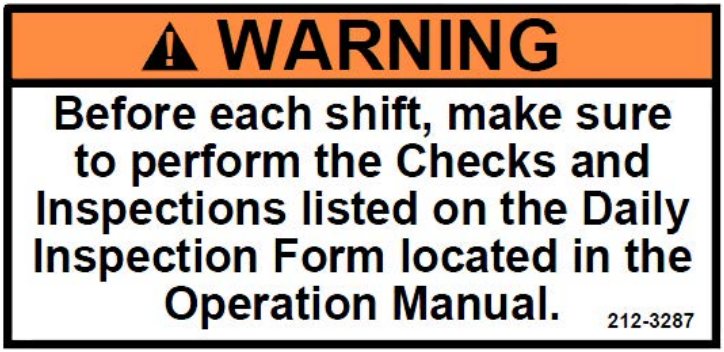

Figure 10. Warning Inspections, PN 212-3287

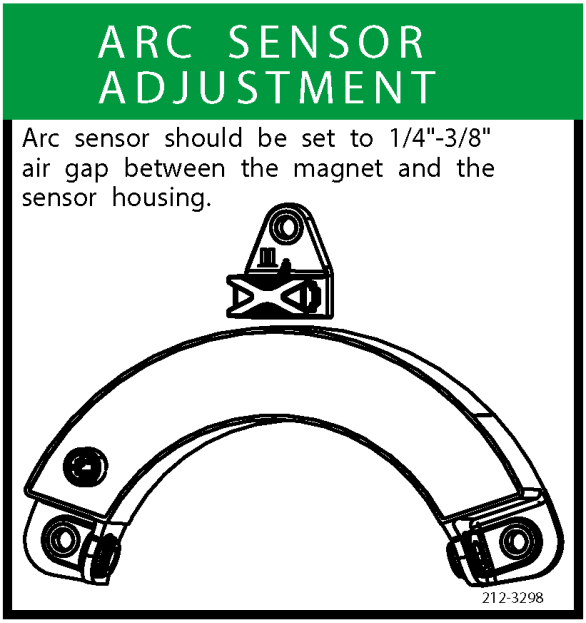

Figure 11. Arc Sensor, PN 212-3298

Figure 12. Danger: Stay Clear Container Off Ground, PN 212-0980

Copyright 2026 The Heil Co.
Printed in the U.S.A.

BODY AND CAB DECAL IMAGES

Figure 13. Decal, Tailgate Props Operation, PN 212-3062

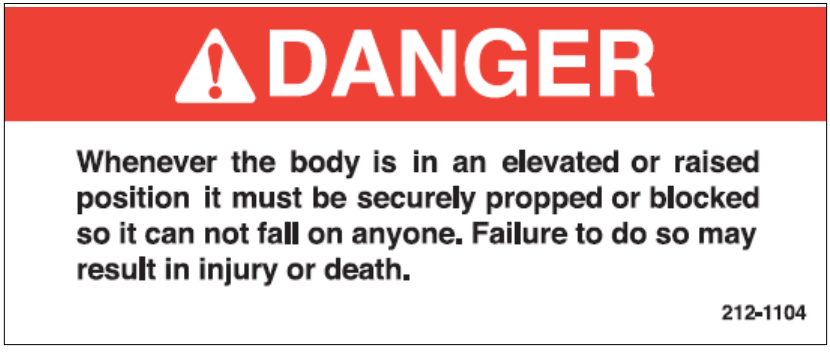

Figure 14. Danger: Elevated Body Propped, PN 212-1104

Figure 15. Danger: Stand Clear Automatic Lift, PN 212-1242

Copyright 2026 The Heil Co.
Printed in the U.S.A.

BODY AND CAB DECAL IMAGES

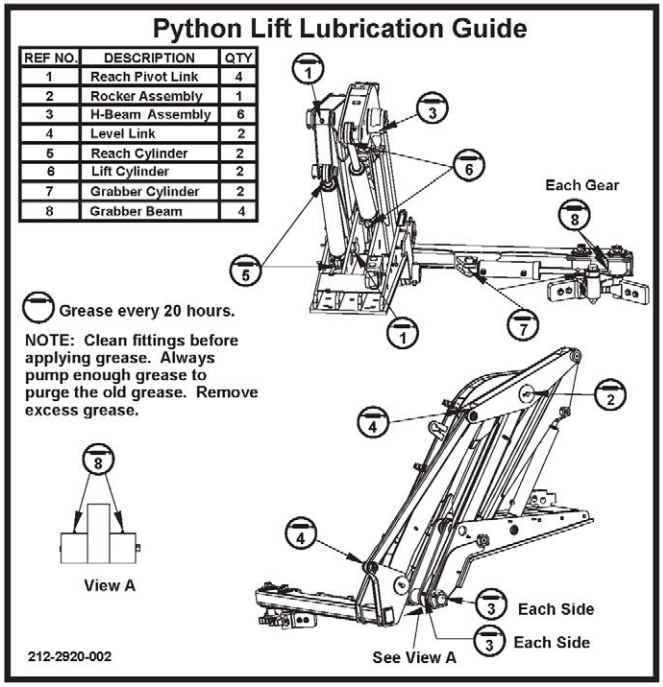

Figure 16. Python Lift Lubrication Guide, PN 212-2920-002

Figure 17. Warning: Keep Away From Gear, PN 212-1330

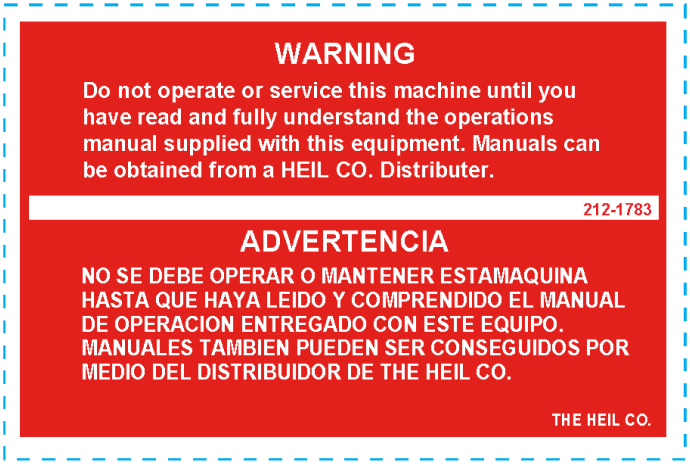

Figure 18. Warning: Operations Manual, PN 212-1783

Copyright 2026 The Heil Co.
Printed in the U.S.A.

BODY AND CAB DECAL IMAGES

Figure 19. Warning: Overall Height, PN 212-1584

Figure 20. Danger: Raise Tailgate Before Raising Body, PN 212-1626

Figure 21. Danger: Not An Entrance Or Exit, PN 212-1642

Copyright 2026 The Heil Co.
Printed in the U.S.A.

BODY AND CAB DECAL IMAGES

Figure 22. Danger: Do Not Enter Under Chassis, PN 212-1764

Figure 23. Caution: Side Access Door, PN 212-1780

Copyright 2026 The Heil Co.
Printed in the U.S.A.

BODY AND CAB DECAL IMAGES

Figure 24. Warning: Lock-Out / Tag-Out, PN 212-1781

Figure 25. Warning: Battery Disconnect Switch, PN 212-2875

Figure 26. Danger: Stand Clear Tailgate, PN 212-1801

Copyright 2026 The Heil Co.
Printed in the U.S.A.

BODY AND CAB DECAL IMAGES

Figure 27. Danger: Do Not Use For Towing, PN 212-1820

THIS UNIT CONFORMS TO ALL PRESENT AMERICAN NATIONAL STANDARDS INSTITUTE SAFETY REQUIREMENTS Z245.1 IN EFFECT ON THE DATE OF MANUFACTURE.

ESTA MAQUINA ESTA DISENADA CONFORME CON LAS NORMAS DE SEQURIDAD Z 245.1 DE LA AMERICAN NATIONAL STANDARDS INSTITUTE EN VIGOR A LA FACHA DE SU MANUFACTURA.

212-1841 THE HEIL CO.

Figure 28. Safety Requirements, ANSI, PN 212-1841

Copyright 2026 The Heil Co.
Printed in the U.S.A.

BODY AND CAB DECAL IMAGES

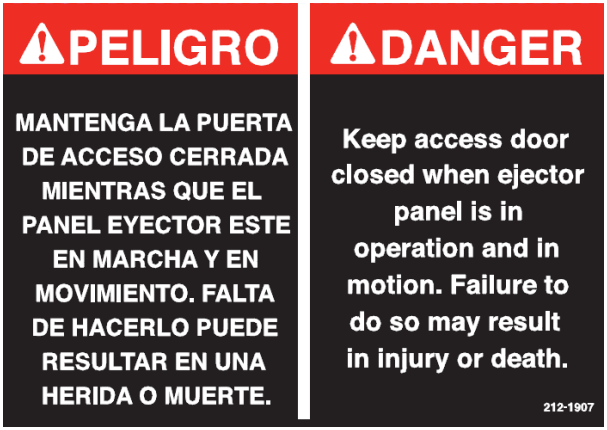

Figure 29. Danger: Access Door Closed, PN 212-1907

Figure 30. Caution: Stand Clear Panel, PN 212-1911

Figure 31. Caution: Ladder Safety/Balance, PN 212-1914

Figure 32. Warning: Overall Height, PN 212-1915

Copyright 2026 The Heil Co.
Printed in the U.S.A.

BODY AND CAB DECAL IMAGES

Figure 33. Safety Instructions, Back-Up Alarm, PN 212-1918

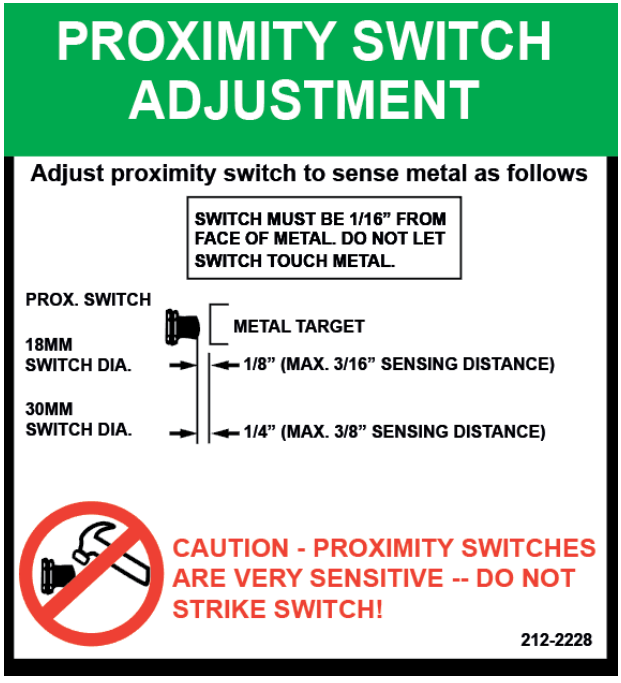

Figure 34. Warning: Proximity Switch Adjustment, PN 212-2228

Copyright 2026 The Heil Co.
Printed in the U.S.A.

BODY AND CAB DECAL IMAGES

PACKER/EJECTOR PANEL ADJUSTMENT UNITS with AUTOPACK ONLY

This adjustment should be made with the hydraulic system at operating temperature and the engine RPM held at a level to cause the packer panel to move at its fastest speed during retract.

RETRACT STROKE

1. Adjust the retract proximity switch so the packer panel retract function shuts off and the panel comes to rest 2 inches away from the front head(outside proximity switch located on the front head). Do not let the packer panel touch the front head (no slamming).
2. After the stroke has been set, cycle the panel a final time. When the panel stops retracting, manually press the retract button and note the travel left between the packer panel and the front bulkhead. On some units, the outside proximity switch must be disconnected before manually pressing the retract button. If travel is less than 2 inches, repeat step 1.

EXTEND STROKE

1. Extend the packer panel until the rollers on the packer follower stop and rest at the end of the fixed panel guides.
2. Adjust the full extend proximity switch (inside proximity switch located on the front head) so the retract portion of the autopack cycle starts just before the panel follower rollers leave the fixed panel guides. This will leave about 42 inches of packer extend stroke.

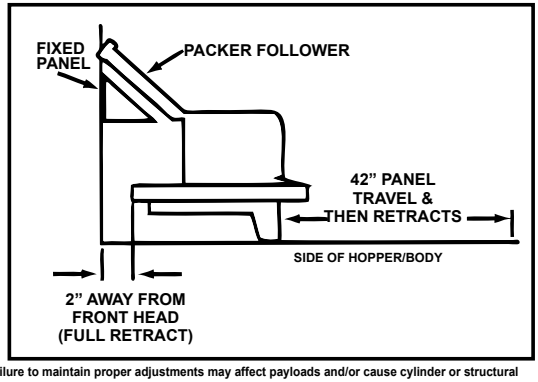

Failure to maintain proper adjustments may affect payloads and/or cause cylinder or structural damage.

Figure 35. Packer/Ejector Panel Adjustment Units With Autopack Only PN 212-2338

DURAPACK® BODY LUBRICATION GUIDE

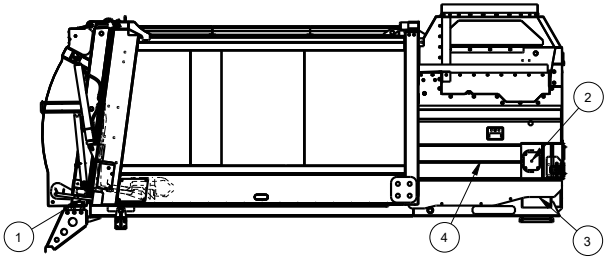

#	DESCRIPTION	QTY.	FREQUENCY
1	Tailgate Lock Bearing	2	Weekly/Every 50 Hours
2	Packer Cylinders	2	Weekly/Every 50 Hours
3	Sump Hinge	1	Weekly/Every 50 Hours
4	Packer Panel Tracks	2	Monthly/Every 200 Hours

Note: Use No. 1 pressure gun grease.

Clean fittings before applying grease and always pump enough grease into joint to remove the old grease.

Wipe off excess.

Lubricate moveable mechanical parts without fittings every 60 days with non-detergent engine oil.

212-3624

Figure 36. DuraPack Body Lubrication Guide, PN 212-3624

Copyright 2026 The Heil Co.
Printed in the U.S.A.

BODY AND CAB DECAL IMAGES

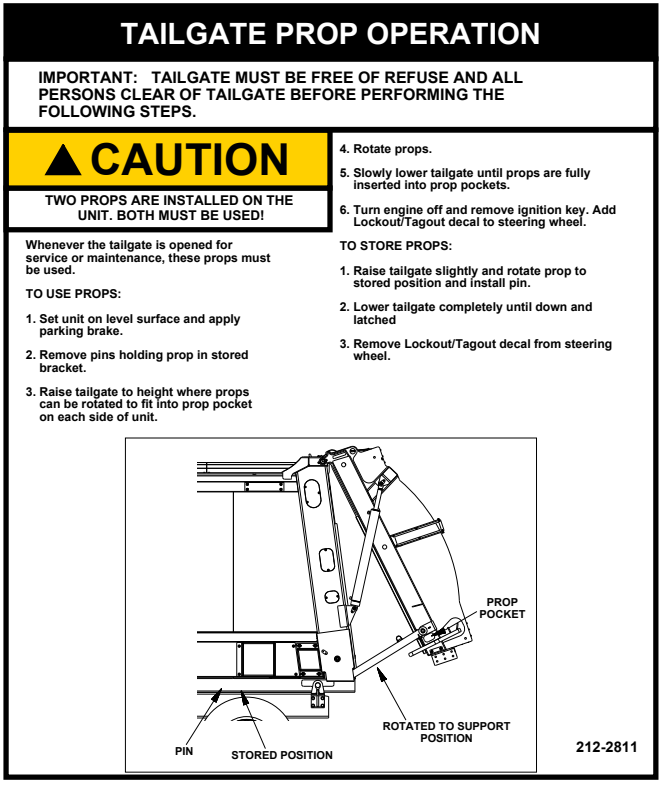

Figure 37. Caution, Tailgate Prop Operation, PN 212-2811

Figure 38. Flag, Made In The USA, PN 212-2689

Copyright 2026 The Heil Co.
Printed in the U.S.A.

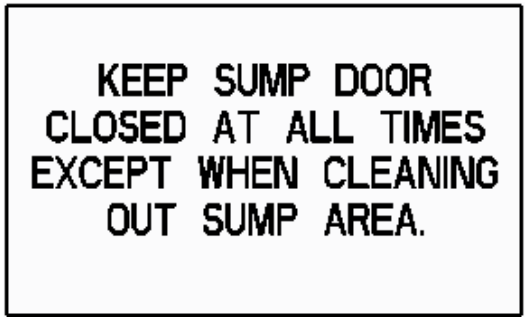

Figure 39. Keep Sump Door Closed, PN 212-2605

Figure 41. Elevated Body Emptied And Propped, PN 212-1103

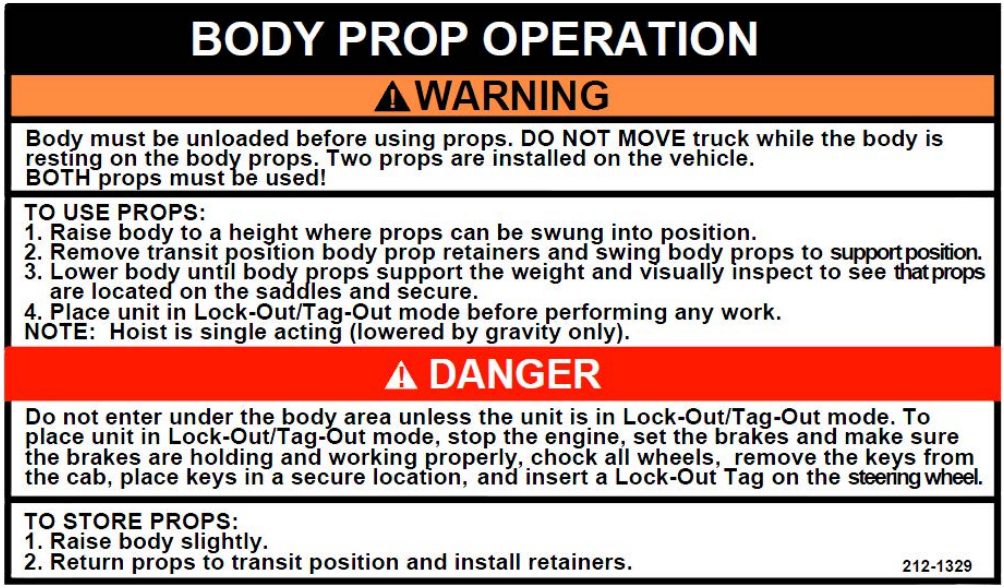

Figure 40. Body Prop Operation, PN 212-1329

Copyright 2026 The Heil Co.
Printed in the U.S.A.

TAILGATE DECAL PLACEMENT & LIST

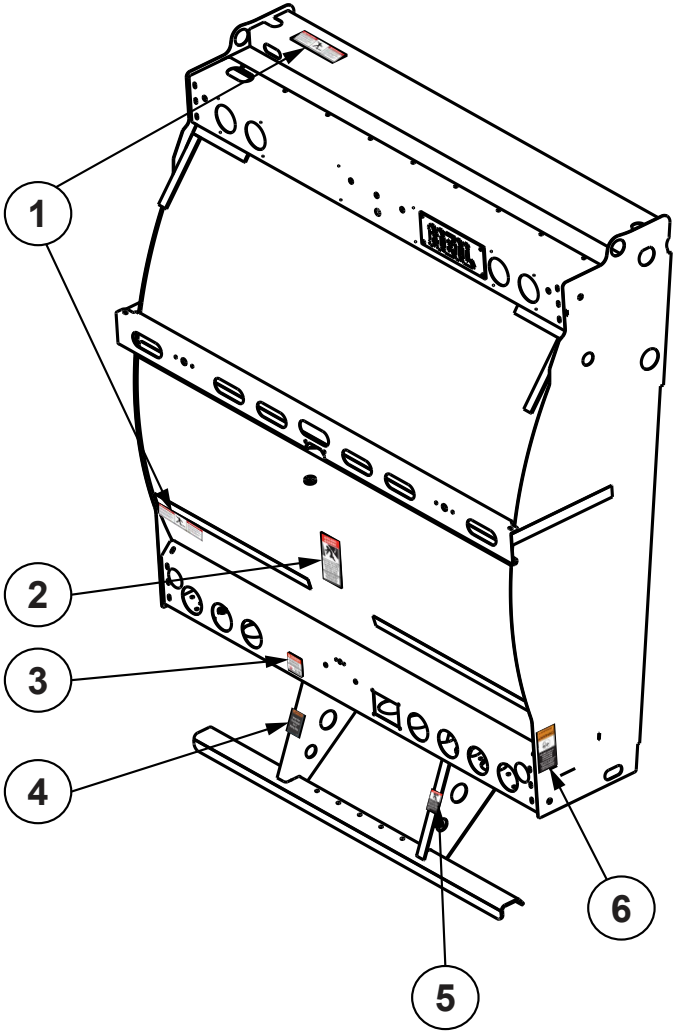

Figure 42. Tailgate Decal Placement

ITEM	PART No.	DESCRIPTION	QTY
	490-0062-003	KIT, DECAL	
1	212-2394	DECAL, WARNING, UNIT LOCKOUT	2
2	212-1801	DECAL, DANGER - STAND CLEAR TAILGATE	1
3	212-1820	DECAL, DANGER - TOWING - IN CAB	1
4	212-1631	DECAL, WARNING, BUMPER NOT STEP	1
5	212-1634	DECAL, DANGER - STAND CLEAR	1
6	212-2691	DECAL, WARNING. DO NOT CROSS	2

Copyright 2026 The Heil Co.
Printed in the U.S.A.

TAILGATE DECAL IMAGES

Figure 45. Warning Unit Lockout, PN 212-2394

Figure 43. Danger: Towing, PN 212-1820

Figure 44. Not A Step, PN 212-1631

Copyright 2026 The Heil Co.
Printed in the U.S.A.

TAILGATE DECAL IMAGES

Figure 46. Danger: Stand Clear Tailgate, PN 212-1801

Figure 48. Warning, Do Not Cross, PN 212-2691

Figure 47. Danger: Stand Clear, PN 212-1634

Copyright 2026 The Heil Co.
Printed in the U.S.A.

CARE OF DECALS

It is important that the decals are properly cleaned to make sure that they are readable and do not come off the unit. Use the following steps to clean the decals.

General Instructions

- Wash the decals with a blend of mild car wash detergent and clean water.
- Rinse with clean water.
- Let the vehicle air-dry or dry with a micro-fiber cloth.
- Do not allow fuels to stay in contact with the decal for an extended period of time. Remove the fuel contamination as quickly as possible.
- Do not use carnauba-based wax over the decals.
- Do not use a mechanical brush while washing the decals.

Pressure Washer Precautions

- Pressure washing can cause damage to decals. It can cause the edges of the decals to lift and peel the decal away from the unit. Over time, the decal can fade, crack or chip away.
- See the following figures for correct and incorrect methods of pressure washing.
- Use pressure washing only when other cleaning methods are not effective. If you use a pressure washer, use the following precautions.
  - Spray nozzle opening: 40° wide pattern
  - Spray angle: 65° from vehicle's body
  - Distance of nozzle to decal: 15" minimum
  - Water pressure: <= 800 psi
  - Length of time: not more than 30 sec.
  - Do not use sharp angles to clean the decals – this can lift the decals from the unit.
  - NEVER use a "turbo pressure nozzle".

Copyright 2026 The Heil Co.
Printed in the U.S.A.

CARE OF DECALS

Pressure Washer Technique

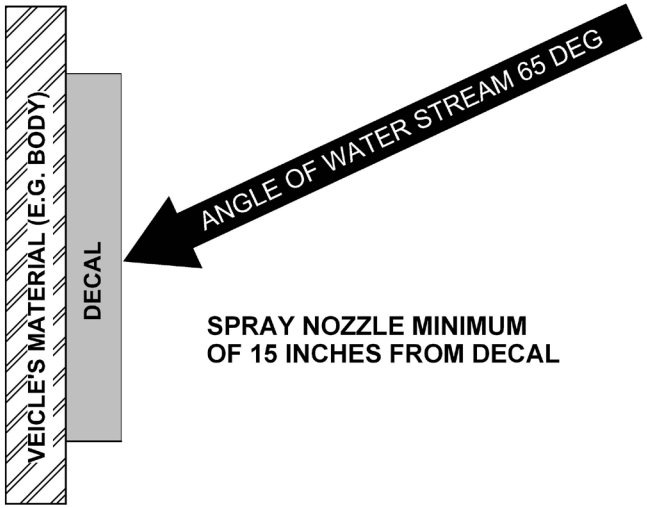

Figure 49. Recommended Technique

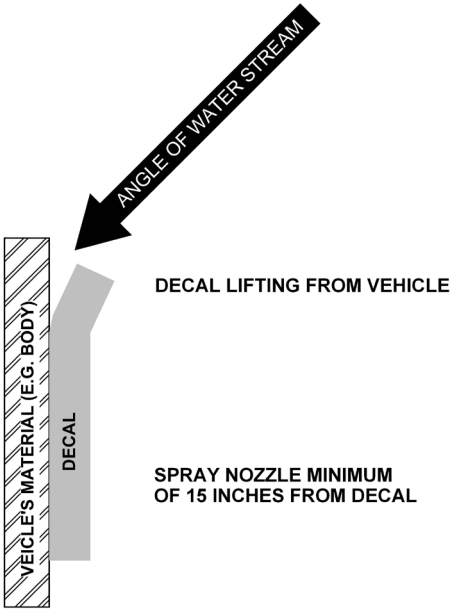

Figure 50. Incorrect Technique

Alternative Cleaning Procedure

When normal cleaning procedures do not remove difficult debris from the decals, try the following:

⚠ WARNING

Isopropyl alcohol is flammable and is harmful to eyes and skin. Keep isopropyl alcohol away from heat or open sources of ignition. Refer to OSHA standards and seek immediate medical help.

- Spot clean the decal with Isopropyl Alcohol and a micro-fiber cloth (rag).
- If these methods do not work on a problem area, call a Heil Dealer or Heil Customer Service.

Copyright 2026 The Heil Co.
Printed in the U.S.A.

SECTION 3
LOCK-OUT/TAG-OUT PROCEDURE

Copyright 2026 The Heil Co.
Printed in the U.S.A.

LOCK-OUT/TAG-OUT PROCEDURE

⚠ DANGER

This procedure MUST be followed before entering the unit's body or performing any maintenance, repair, or cleaning procedures on the unit. SERIOUS INJURY or DEATH will occur if not followed.

⚠ WARNING

If you do not have functioning Lock-Out/Tag-Out equipment and/or are not an authorized employee, STOP and DO NOT initiate any service on the unit. Contact your supervisor immediately.

NOTICE

This Lock-Out/Tag-Out procedure represents Heil's minimum recommendation and should be used in conjunction with and should not supersede additional or more stringent safety requirements specified by your company's policy. Please check with your supervisor to determine if your company has a specific Lock-Out/Tag-Out procedure. Contact your supervisor, Heil Technical Service, or reference OSHA Regulation 1910.147 if you have any questions about Lock-Out/Tag-Out.

Watch the Service Shack Video online at **Heil Service Shack** by selecting **Lock-Out/Tag-Out.**

A. Put the unit in a Lock-Out/Tag-Out:
   1. **BEFORE** you enter the unit's body
   2. **BEFORE** you perform ANY maintenance, repair or cleaning procedures on the unit.

B. All stored energy must be removed and/or protected against, common sources found on Heil units (Including, but not limited to):
   1. Hydraulics
   2. Electrical
   3. Gravity
   4. Pneumatics
   5. Mechanical

C. Examples of some basic equipment required:
   1. Multi-hasp
   2. Single-keyed red lock
   3. Lockout tag

Figure 51. Lock-Out/Tag-Out Tag (Do Not Operate Tag)

Copyright 2026 The Heil Co.
Printed in the U.S.A.

LOCK-OUT/TAG-OUT PROCEDURE

Locking Out The Unit

Follow These Steps:

1. APPLY the parking brakes. VERIFY they hold the unit securely in place and function properly.
2. Chock all wheels.
3. SET the tailgate props when the tailgate is raised for any service, maintenance or cleaning.
4. SET the body props when the body is raised for any service, maintenance or cleaning.
5. BEFORE disconnecting the main battery power, VERIFY that all stored energy sources have been fully depleted according to your company's policy.
   a. Hydraulic (such as forks or grabber arm in stowed position).
   b. Pneumatic (such as tag axles).
   c. Mechanical (such as springs).
   d. Gravity (such as tailgate raised).
6. REMOVE the key from the ignition and store it in a secured location for your safety.
7. Disconnect the battery power by flipping the battery box disconnect switch to OFF.
   a. VERIFY all electrical stored energy is depleted according to your company procedure.
8. INSERT the mufti-hasp into the disconnect switch.
9. ATTACH your red single-keyed Lock-Out/Tag-Out lock with your tag exposed and visible to the multi-hasp.
   a. ALWAYS use your individually assigned lock and tag when performing any service or maintenance with other authorized employees. Each employee must place their own lock and tag on the multi-hasp attached to the disconnect switch.
10. REMOVE your lock key and put it in your pocket for your safety.
    a. ONLY the person who placed the lock and tag on the multi-hasp is authorized to remove it.
    b. NEVER remove another employee's Lock-Out/Tag-Out equipment without approval from the authorized person responsible.
    c. Shift or personnel changes: Off-going employees MUST provide all details pertaining to the unit's status to the oncoming employee(s). The oncoming employee(s) MUST perform the Lock-Out/Tag-Out procedure to verify all stored energy is removed from the unit BEFORE applying their Lock-Out/Tag-Out equipment.
11. BEFORE removing your Lock-Out/Tag-Out equipment to return the unit to service, follow these steps.
    a. INSPECT the work area to ensure all nonessential items have been removed.
    b. VERIFY all unit components are operationally intact.
    c. ENSURE all employees are safely positioned or removed from the area.
    d. NOTIFY all affected employees that the Lock-Out/Tag-Out devices are being removed.

Copyright 2026 The Heil Co.
Printed in the U.S.A.

SECTION 4
FEATURES, CONTROLS, SWITCHES, & ICONS

Copyright 2026 The Heil Co.
Printed in the U.S.A.

FEATURES

NOTICE

The location and appearance of the controls may be different than those shown in this manual. Make sure you know the location and how to operate the controls on your unit before using the vehicle.

InSight™ Diagnostic Display

The Mobile Controller uses the Insight Diagnostic Display for displaying the current status of Input/Output, engine speed, temperatures, etc. This can also be used for configuring or selecting different options in the Mobile Controller. For more information on the Insight Diagnostic Display, refer to **Mobile Controller** and **Service Manual Automated Side Loader Mobile Controller Program 109-0373.**

Auto-Lift Mode

Auto-Lift Mode is standard. While in auto mode, the lift will automatically retract and dump when holding the grabber close icon from switch bank/keypad if installed or through the in-cab display “on route screen” by pressing auto lift icon refer to **"Operation Specifications" on page 54** and **"Lifting And Loading Refuse With The Python Lift Arm" on page 103** for more information.

Select-O-Pack™

Select-O-Pack is a standard feature on all Mobile Controller controlled Heil DuraPack Automated Side Loaders. This feature automatically cycles the Auto-Pack after a predetermined number of lift cycles. Refer to **"Operation Specifications" on page 54** and **"Compacting The Load" on page 105** for more information.

To set the number of lift cycles before automatic operation of the packer, follow these steps.

1. Turn the SYSTEM POWER switch OFF.
2. Press and hold the packer retract icon for five (5) seconds. The in-cab alarm will begin to sound on the fifth second.
3. Each additional activation of the retract icon will allow one additional lift cycle before automatically packing the load. If no further activation’s of the packer retract icon is performed, the Select-O-Pack function will be disabled.
4. Turn SYSTEM POWER switch ON.

You can also pack the refuse manually any time after loading the refuse in the hopper. You can use the in-cab controls for the packer panel to compact the load again with a manual cycle.

Auto/Manual Pack Mode

Auto/Manual Pack Mode is standard on. In auto mode, the packer completes its cycle automatically with a quick press of the packer extend icon in the on route screen. In manual mode, you must hold the extend or retract icons on keypad/in-cab display "on route screen" to keep the packer cycling, and all control interlocks are disabled—use this only when bypassing interlocks is necessary. To switch between auto and manual modes with system power “ON”, PRESS and HOLD both extend and retract icons simultaneously until the in-cab alarm stops.

Copyright 2026 The Heil Co.
Printed in the U.S.A.

UNIT INTERLOCKS

There are several interlocks provided to keep a specific function from operating when certain conditions exist. This will affect the operation of the unit and these conditions are as follows.

1. Pump Overspeed Interlock – the Mobile Controller is programmed to disengage the hydraulic pump when the engine speed exceeds a specific RPM. The pump will reengage when the engine speed drops below a specific RPM.
2. Side Door Interlock – If the side door is open, the hydraulic pump will not operate. The pump will operate only after the side door is fully closed and the SYSTEM POWER switch is shut off and turned on again.
3. Filter Bypass Shutdown Interlock – If the hydraulic oil filter becomes contaminated, the hydraulic pump will shut-off. If the oil filter element is not replaced within six hours of bypass condition, the pump will only operate in 3-minute intervals. This 3-minute interval can be reset by cycling the pump switch off, then on again.
4. High Transmission Temperature Interlock – this interlock prevents operation of the pump when the transmission fluid temperature exceeds a safe operating range. The pump will not engage for three minutes after the transmission fluid has cooled to within operating range.
5. Hydraulic Pump Shutdown Interlock – this interlock prevents normal operation of the hydraulic pump when the Mobile Controller has become unable to correctly detect engine RPM.
6. Lift Interlock – after raising the tailgate and extending the packer to eject the load, the packer must be retracted to the front head before the lift will raise the first time. For Joystick Control – this interlock prevents two items from normal operation.
   a. Grabbers Open Interlock (Option) – prevents the grabbers from being opened with the lift in the raised position.
   b. Lift Raise Interlock (Option) – prevents the lift from raising until a specific grabber pressure is reached.
7. Packer Interlock – the packer will not extend past the full extend switch unless the tailgate is open

Copyright 2026 The Heil Co.
Printed in the U.S.A.

OPERATION SPECIFICATIONS

Pump System

- The pump will be on only when the in-cab red SYSTEM POWER switch is activated, the hopper side door is closed and locked, and the filter is not in by-pass mode.
- The pump will be active when the above conditions are met and the packer is activated.
- The lift will function in neutral or in gear when foot brake is applied and the RPM is below 900.
- The lift will grab, lift, lower and release in 6-8 seconds at engine idle (700 RPM).

Packer

- Completes one cycle (extend and retract) in 12-14 seconds at 1200 RPM.
- Slows during lift operation.
- Functions at any RPM.
- Stops at a pre-determined travel speed.

Select-O-Pack

- Triggered off the grabber release push-button, this system initiates a pack cycle once the programmed number of lift cycles have been completed. (Factory pre-set is two (2) lift cycles). See **"Features" on page 52** and **"Compacting The Load" on page 105** for more information.

Note: Adjust the CANS PER PACK via the display by performing the following steps.

1. Select “On Route”

Figure 52.

2. Press in the white area under CANS Per Pack.

Figure 53.

Copyright 2026 The Heil Co.
Printed in the U.S.A.

OPERATION SPECIFICATIONS

3. Enter the number of CANS PER PACK; press OK.

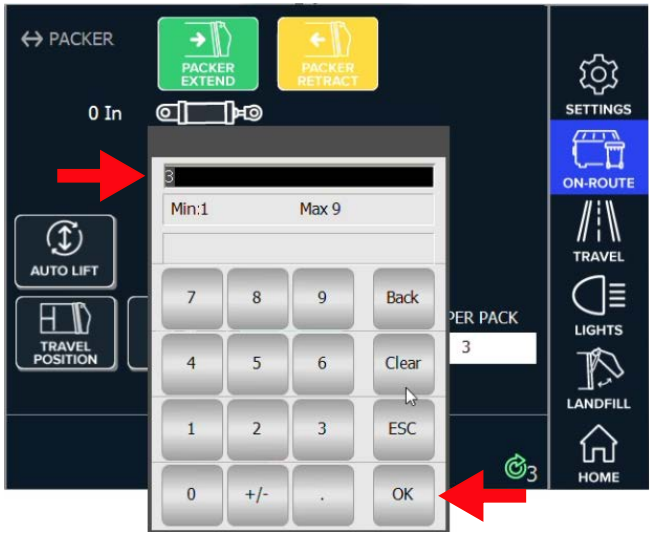

Figure 54.

4. Number in active telltale should update.

Figure 55.

Auto-Lift

- Toggle On/Off by holding grip and release buttons simultaneously five (5) seconds (until the in cab alarm stops sounding).
- Closing grabbers will initiate Auto-Lift sequence. Must hold grabber closed button to continue cycle.
- Container will raise and retract automatically to the dump position.
- Operator manually replaces cart to desired position on the ground
- Pressing and holding grabber open button will return lift to stowed position. See **"Features" on page 52** and **"Lifting And Loading Refuse With The Python Lift Arm" on page 103** for more information

Note: Toggle Auto Lift via the display by performing either step one or two below.

1. From the ON-ROUTE screen (identified by the blue highlighted field), tap AUTO LIFT.

Figure 56.

Copyright 2026 The Heil Co.
Printed in the U.S.A.

OPERATION SPECIFICATIONS

2. Press AUTO LIFT on the push button panel.

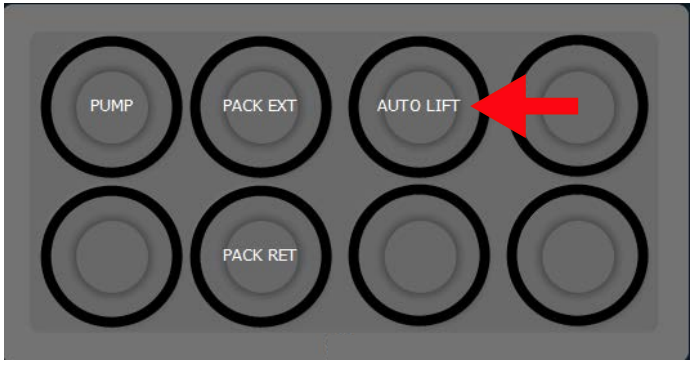

Figure 57.

Warning Signals

- The arm extended light will activate any time the arm is extended or grabbers are not fully open.
- The arm extended light and alarm will activate when the arm is extended or grabbers are not fully open, the transmission is in gear and the foot brake is not applied.
- An alarm will sound and a light will illuminate if the tailgate is raised.
- The backup (reverse) alarm will sound if the body or tailgate is raised or the transmission is in reverse.

California Specific Warning Signals

Backup alarm will sound every time the vehicle moves backward in any condition while the battery disconnect switch is ON." That means that if the truck is left in neutral with the engine off and it moves backward, the backup alarm will go off.

Copyright 2026 The Heil Co.
Printed in the U.S.A.

IN-CAB MAIN CONTROL PANEL

The In-Cab Main Control Panel varies by truck chassis model. See the following illustration for a typical example. Each panel is labeled to indicate its functions, so be sure to familiarize yourself with your unit's control panel.

Note: If the optional switch bank fails, use the In-Cab display switchboard as a temporary solution.

Figure 58. Control Panel

⚠ WARNING

After the system power switch is pressed and motion of components has appeared to stop, additional movement can occur. SERIOUS INJURY or DEATH can occur if stored energy is not released.

1. SYSTEM POWER ON and OFF/STOP SWITCH (RED) - The switch must be ON and the side door closed for the pump to turn on. The packer, lift, and tailgate will not operate with the side door/system power OFF.
   a. PULL for ON position.
   b. PUSH for OFF/STOP position.

Copyright 2026 The Heil Co.
Printed in the U.S.A.

IN-CAB DISPLAY

NOTICE

The packer panel can be stopped at any position by pushing switch to OFF/STOP position.

2. IN-CAB ALARM - Sounds when tailgate or body is opened or raised, the lift is extended, when switching between Auto and Manual Pack Modes or Auto and Manual Lift Modes, when various other conditions occur, or a fault condition occurs. Refer to Diagnostic Fault Codes and the applicable Service Manual , “Body Controller Software” section.
3. USB CHARGING PORT
4. SWITCH BANK (OPTIONAL) - Pump, Pack Extend., Pack Retract., and Pump functions are located in the In-Cab Display.

Boot-Up Screen

This image will appear on the display once it receives power.

Figure 59.

Copyright 2026 The Heil Co.
Printed in the U.S.A.

IN-CAB DISPLAY

Customer Resource QR Code

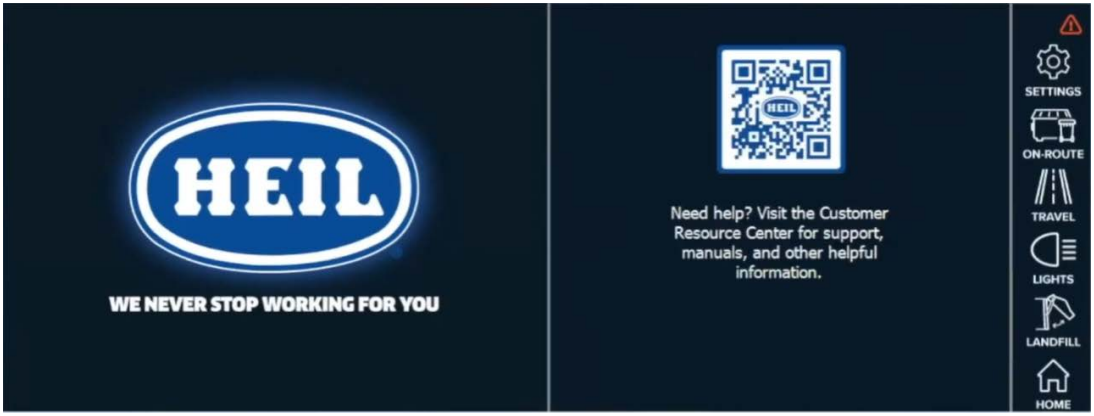

Figure 60.

Notice Page

Appears for ten seconds along with the telltale bulb check.

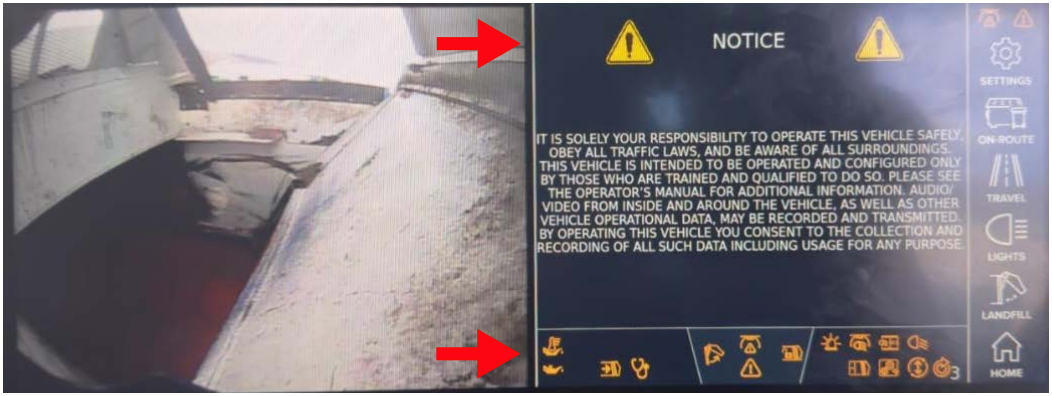

Figure 61.

Copyright 2026 The Heil Co.
Printed in the U.S.A.

IN-CAB DISPLAY

Home Screen

Note: If cameras are configured, it will appear on the left side as shown and can show up to four cameras at one time. If not configured the HEIL logo will appear

Figure 62.

Copyright 2026 The Heil Co.
Printed in the U.S.A.

IN-CAB DISPLAY

Settings Page

Here you can view active alarms and other details for the unit by tapping the corresponding icon. If an alarm occurs, it will be identified under the settings page. The icon will turn red when activated. Tap the red icon to view the alarm details.

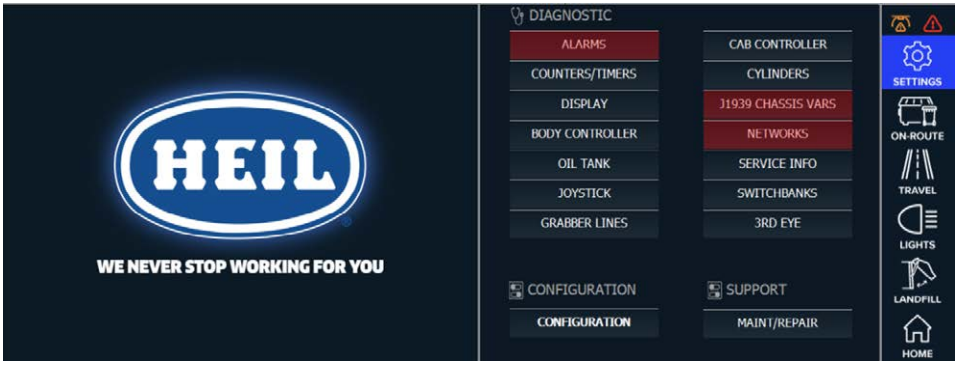

Figure 63.

A. Alarms

Press the "Clear Alarms" icon to clear current alarms. Press the back icon to return to the previous screen.

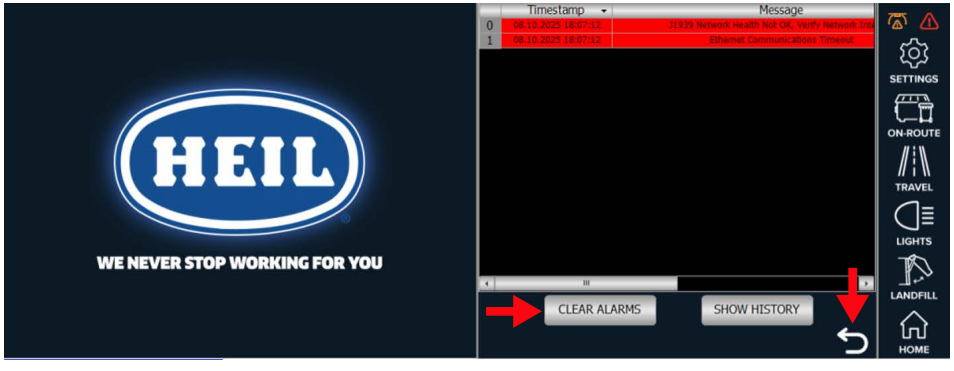

Figure 64.

Copyright 2026 The Heil Co.
Printed in the U.S.A.

IN-CAB DISPLAY

B. Body Controller Inputs

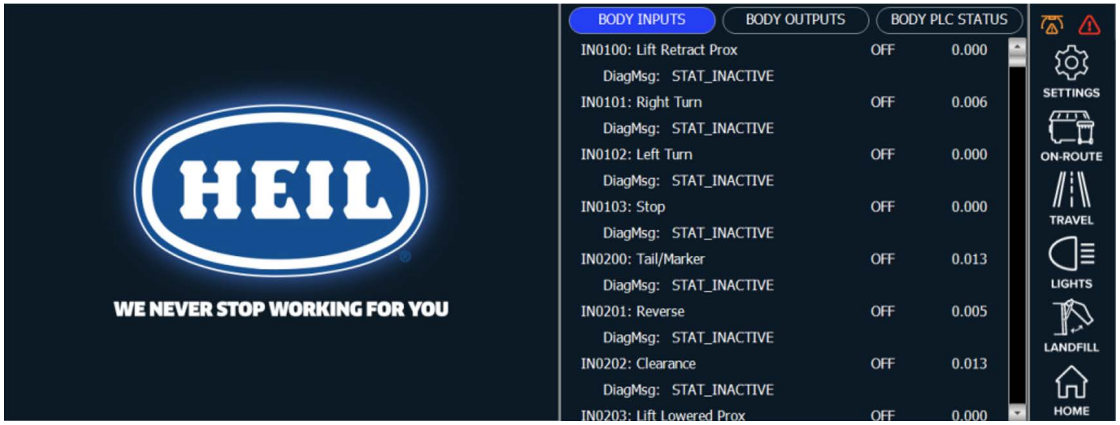

Figure 65.

C. Cab Controller PLC Status

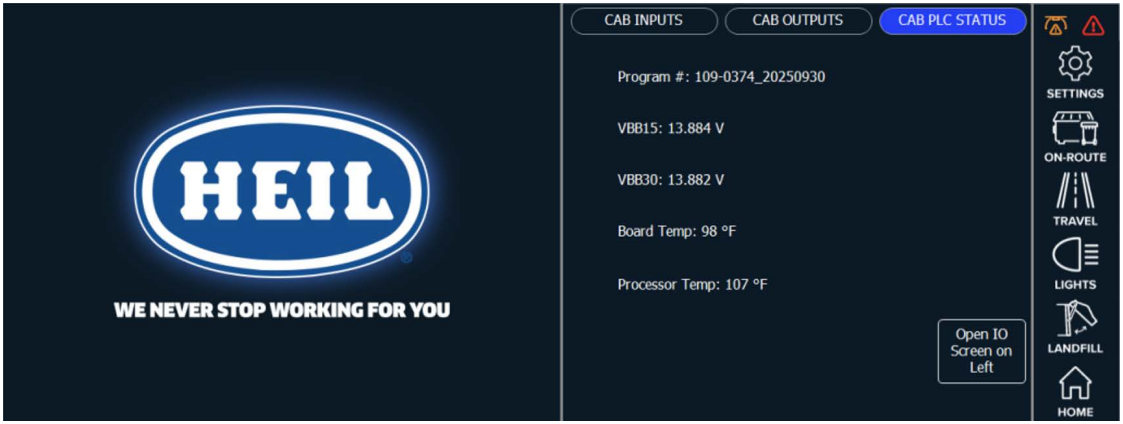

Figure 66.

Copyright 2026 The Heil Co.
Printed in the U.S.A.

IN-CAB DISPLAY

D. Counters & Timers

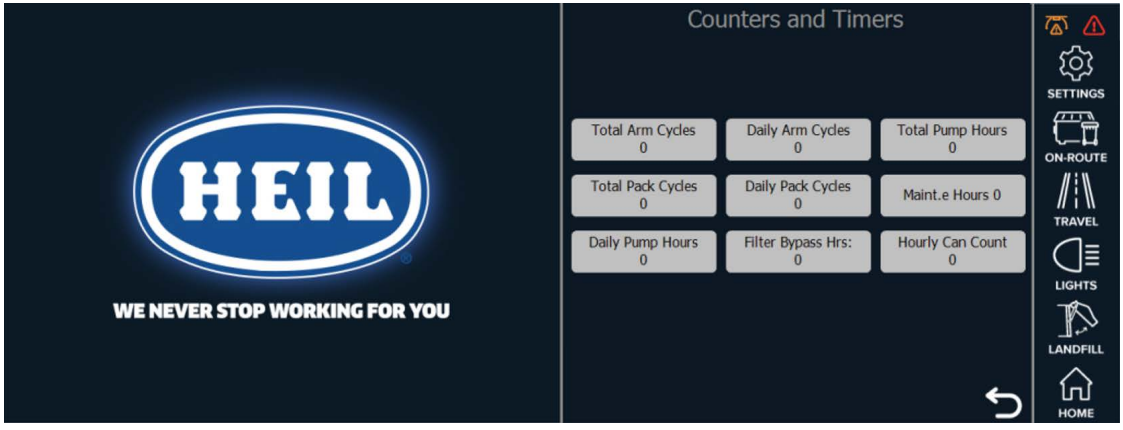

Figure 67.

E. Cylinders

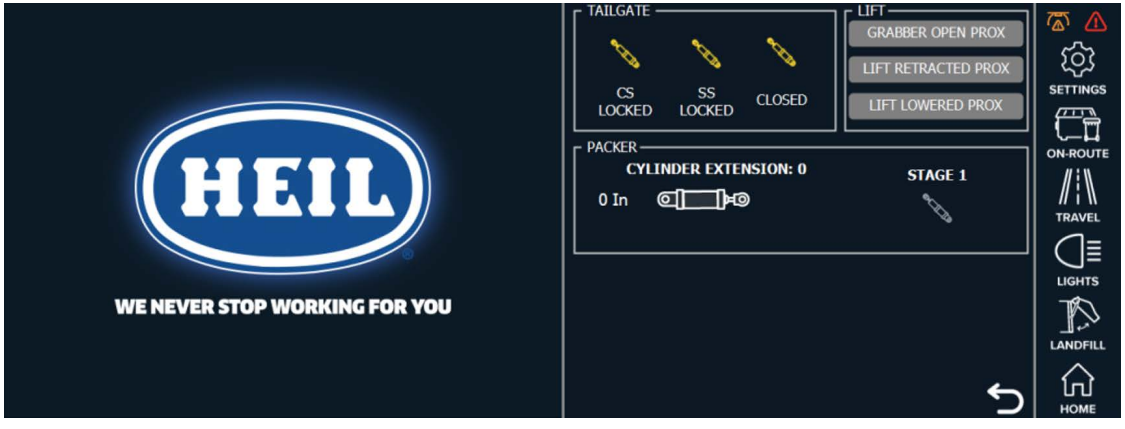

Figure 68.

Copyright 2026 The Heil Co.
Printed in the U.S.A.

IN-CAB DISPLAY

F. Display

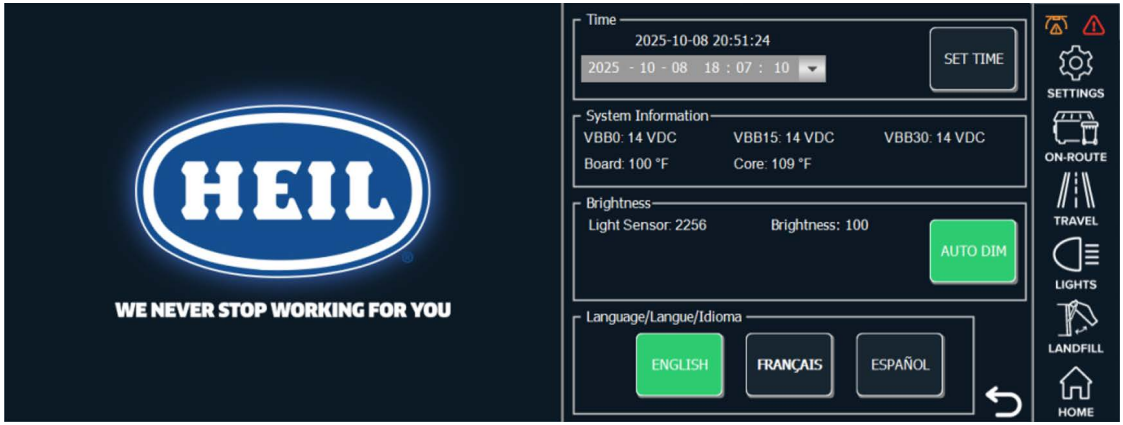

Figure 69.

G. Chassis

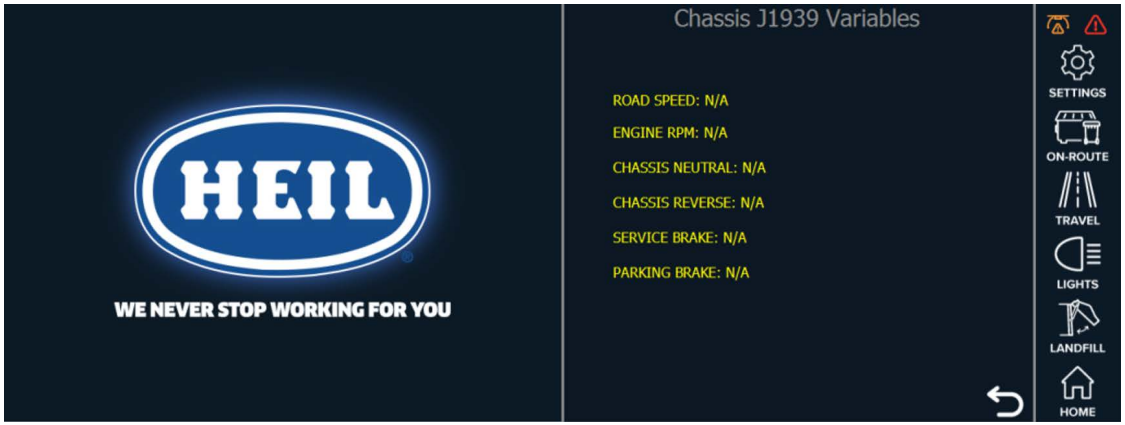

Figure 70.

Copyright 2026 The Heil Co.
Printed in the U.S.A.

IN-CAB DISPLAY

H. Network

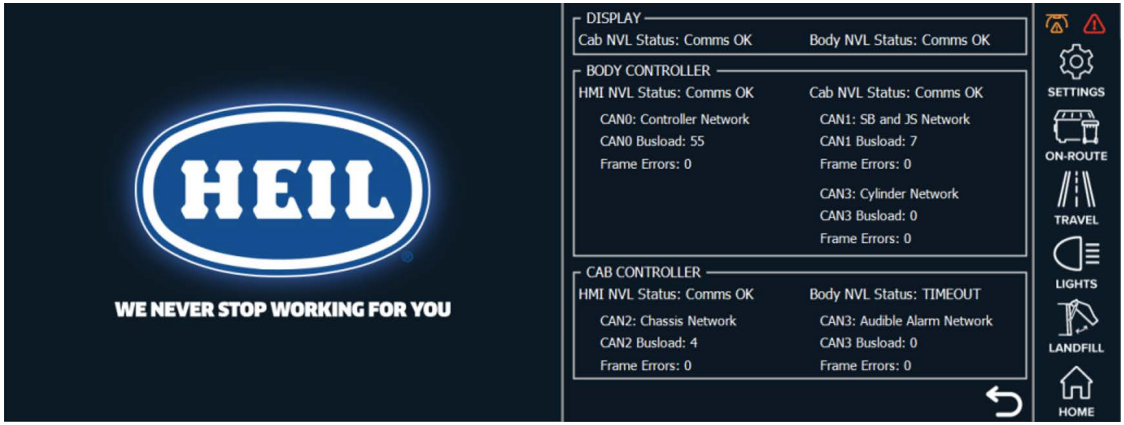

Figure 71.

I. Oil Tank

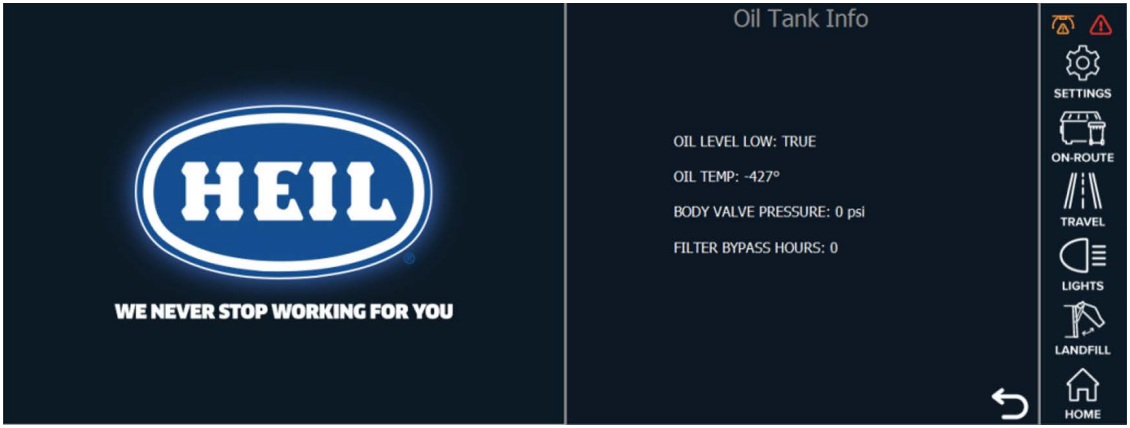

Figure 72.

Copyright 2026 The Heil Co.
Printed in the U.S.A.

IN-CAB DISPLAY

J. Joystick

See **"Python Lift Joystick Controls" on page 77** for joystick override instructions.

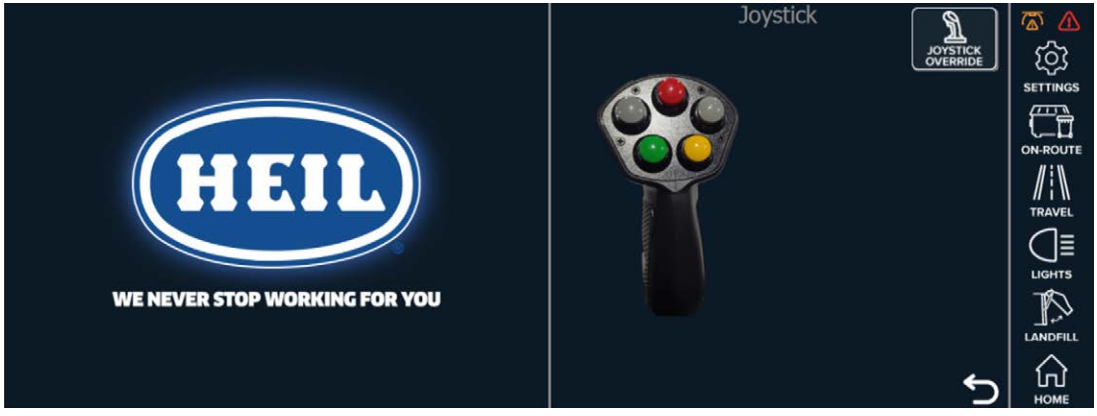

Figure 73.

K. Switch Bank Main

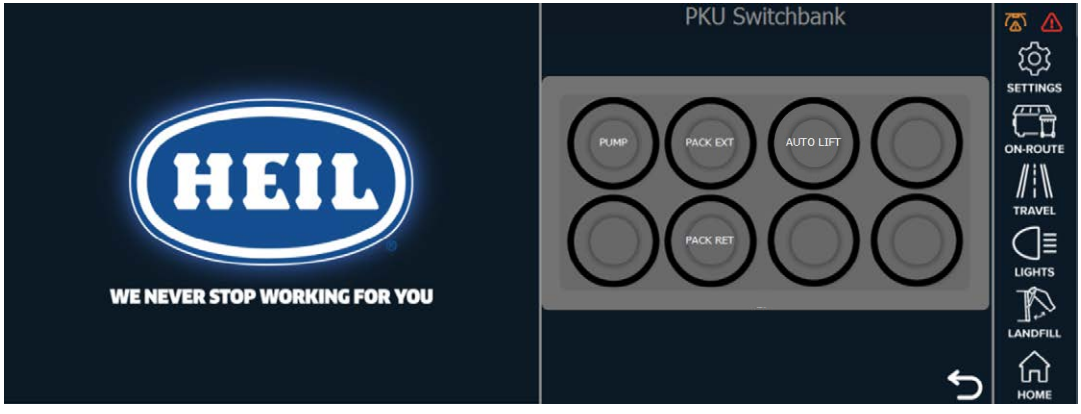

Figure 74.

Copyright 2026 The Heil Co.
Printed in the U.S.A.

IN-CAB DISPLAY

L. Switch Bank Outside Controls

Note: This screen only appears when the customer has ordered the optional auxiliary outside-controls kit and the device is physically connected to the system.

Figure 75.

M. Grabber Lines

Hold the reset icon for five seconds to reset the position to zero.

Figure 76.

Copyright 2026 The Heil Co.
Printed in the U.S.A.

IN-CAB DISPLAY

On Route Screen

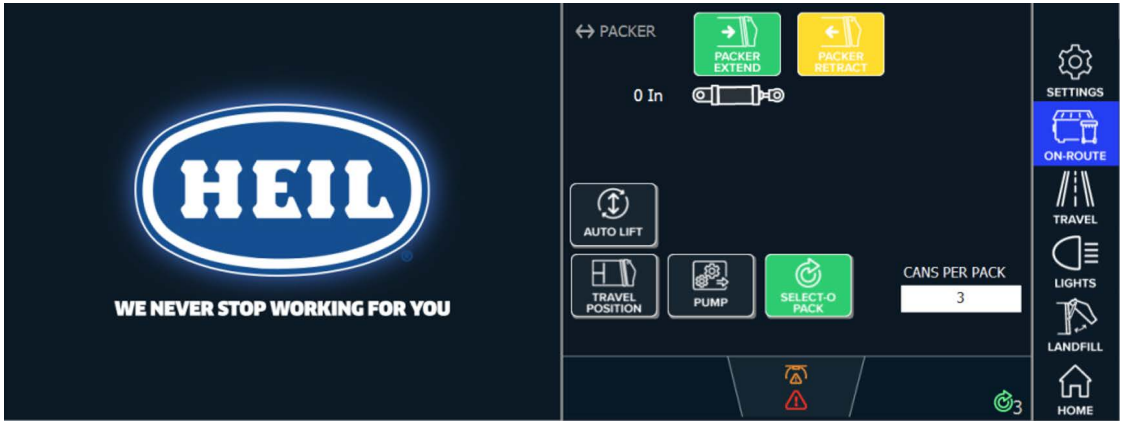

Figure 77.

Travel Screen

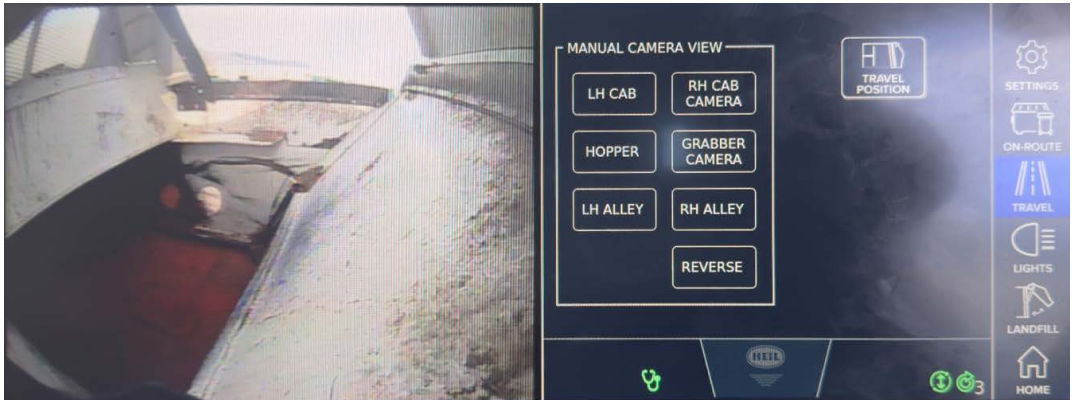

Figure 78.

Copyright 2026 The Heil Co.
Printed in the U.S.A.

IN-CAB DISPLAY

Lights

A. No active lights.

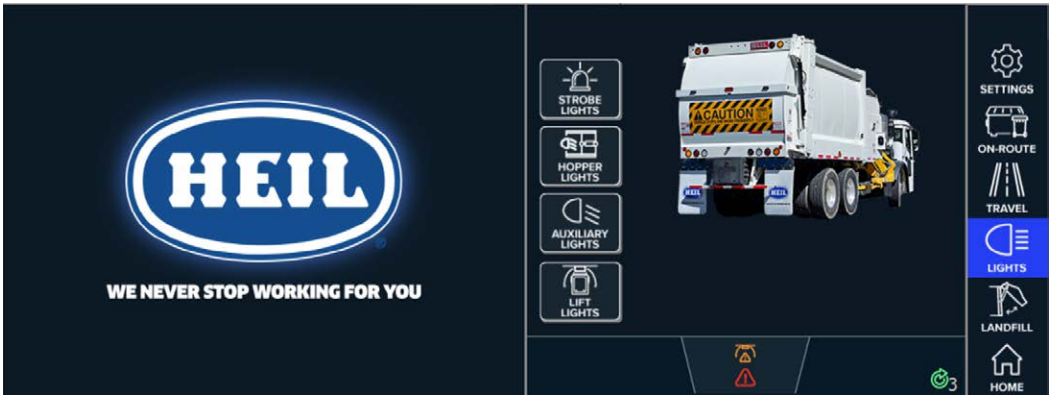

Figure 79.

B. Active lights are indicated by green icons and represented by the truck image displaying illuminated lights.

Figure 80.

Copyright 2026 The Heil Co.
Printed in the U.S.A.

IN-CAB DISPLAY

Landfill Screen

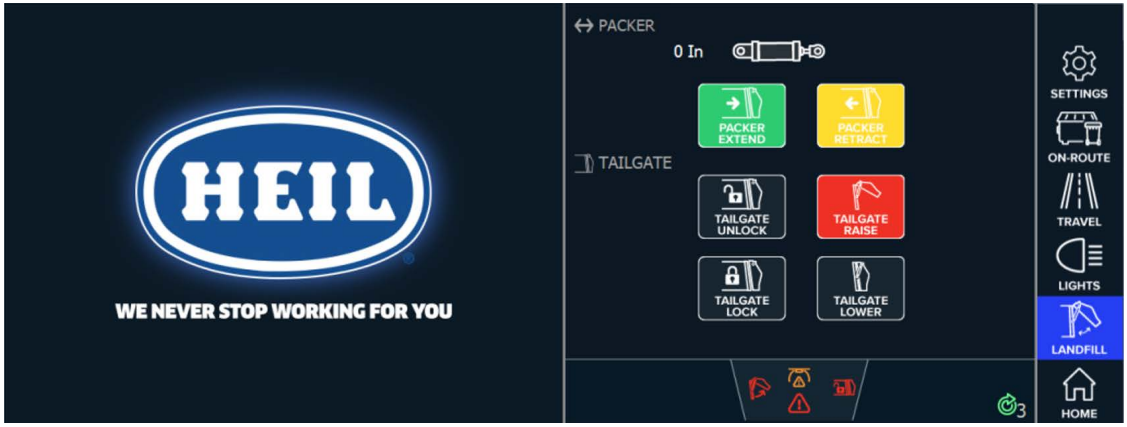

Figure 81.

Copyright 2026 The Heil Co.
Printed in the U.S.A.

IN-CAB DISPLAY

Body Health

The advanced diagnostics within the Heil control system enable the in-cab display to guide maintenance staff precisely to the root cause of the problem.

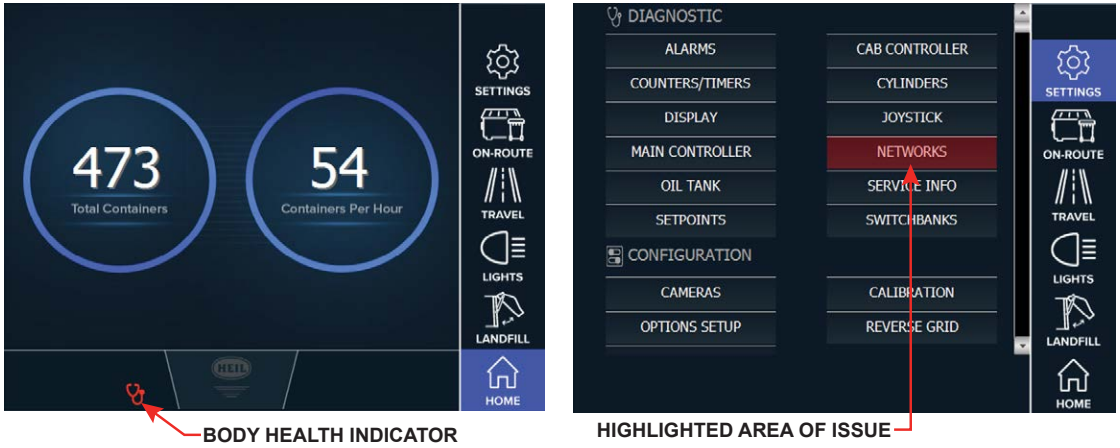

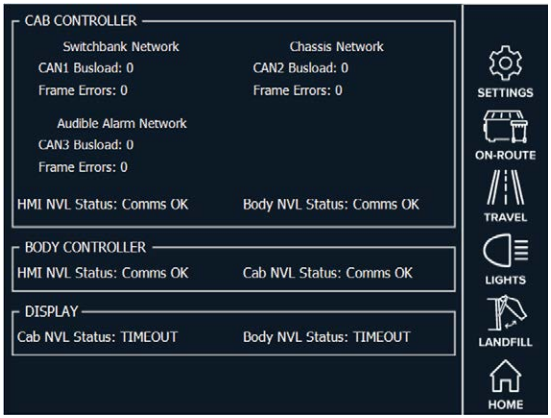

DIAGNOSTIC INFO. TEXT BASED

Figure 82.

Copyright 2026 The Heil Co.
Printed in the U.S.A.

IN-CAB DISPLAY

Out Of Dimension / Tailgate Status

In addition to the audible alert, Telltales offer a visual warning indicating that the vehicle is not positioned to safely travel above the posted speed limit. This feature helps the operator recognize when the vehicle may be exceeding height or width restrictions.

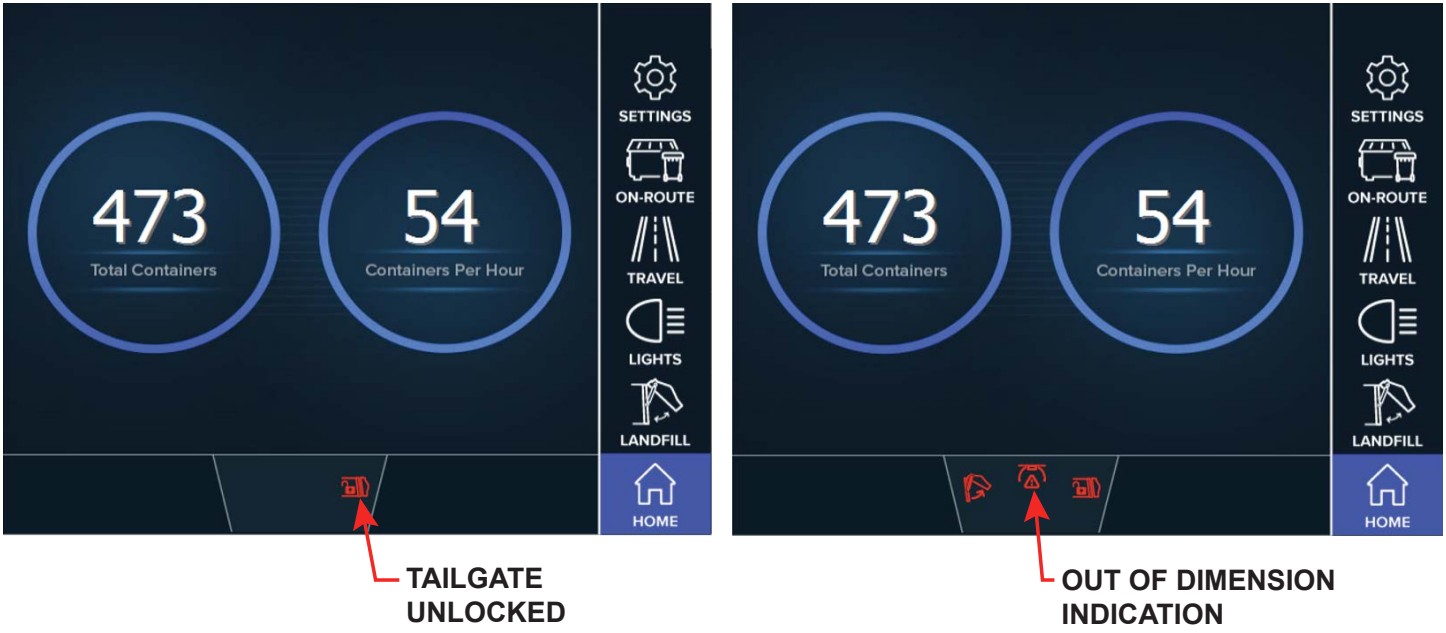

Figure 83.

`

Copyright 2026 The Heil Co.
Printed in the U.S.A.

IN-CAB DISPLAY

Telltale Banner

Telltales will be stacked, and the higher priority will be displayed.

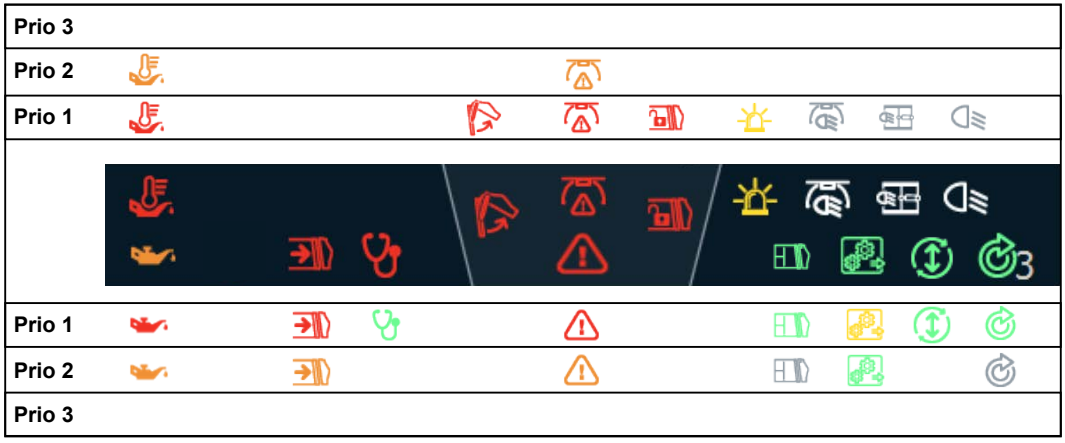

Telltale Legend

A. Dimension & Tailgate Status

Icon	Definition	Activation Trigger / Action
	Tailgate Not Fully Closed	Tailgate is not sensed in the lowered position, lower tailgate before driving
	Tailgate Not Fully Locked (Flashing)	Tailgate not fully locked, lock tailgate before driving, flash above road speed limit
	Tailgate Unlocked (Solid)	Tailgate unlocked, lock tailgate before driving
	Out of Dimension	Above road speed limit, vehicle is not in the travel position, return arm, fully open grabbers, lower tailgate, close/lock any interlocked access doors
	Out of Dimension	Below road speed limit, vehicle is not in the travel position, return arm, fully open grabbers, lower tailgate, close/lock any interlocked access doors

Copyright 2026 The Heil Co.
Printed in the U.S.A.

IN-CAB DISPLAY

B. Body Lighting - Body Status

Icon	Definition	Activation Trigger / Action
	Auxiliary Lighting On	Rear auxiliary backup lights are on
	Lift Lighting On	Lift lights are on
	Hopper Lighting On	Hopper lights are on
	Strobe Lighting On	Strobe lights are on
	Select-O-Pack Enabled	Select-O-Pack is enabled with Number of Packs showing to the left
	Hydraulic Pump Running	Hydraulic pump is on and running at its specified parameters
	Enable Hyd Pump	Flashing when the pump needs to be on but is not
	Auto Lift Enabled	Vehicle is in the travel position. Packer, Top Door
	In Travel Position	Vehicle is in the travel position
	Travel Position Sel.	Travel Position is selected but not in travel position

Copyright 2026 The Heil Co.
Printed in the U.S.A.

IN-CAB DISPLAY

C. Alarms & Health

Icon	Definition	Action
	Active Alarm	Critical error detected on the Body; immediate action should be taken to resolve the issue
	Active Warning	Noncritical error detected on the Body; should be checked when possible
	Logged In	Password login active
	Hydraulic Oil Error	Hydraulic oil level or pressure is out of specified range and should be checked immediately
	Hydraulic Oil Warning	Hydraulic oil level or pressure is approaching an out-of-specified range and should be checked when possible
	Hydraulic Oil Temperature Error	Hydraulic oil temperature is out of specified range and should be checked immediately
	Hydraulic Oil Temperature Warning	Hydraulic oil temperature is approaching an out-of-specified range and should be checked when possible
	Travel Position Selected	Packer Travel Position has been selected; next movement of the pack will move to the travel position and maintain that position
	Travel Position	Packer is in the travel position
	Packer/Ejector Malfunction	Critical error detected in the Packer or Ejector
	Packer/Ejector Warning	Warning of potential issues with the packer or ejector
	Pump ON	Pump is ON and pump icon is BLUE on the in-cab display
	Pump Off (Flashing)	Pump is OFF but pump command is requested

Copyright 2026 The Heil Co.
Printed in the U.S.A.

IN-CAB DISPLAY

Alarm Pop-Up

A notification pop-up will appear on home screen. There is an alarm pop-up (red header) and a warning pop-up (yellow header) both can be cleared with the return icon, and the in-cab alarm will sound. The alarm message is also available in the settings sub-screen. Refer to the alarms and warnings list below for possible alarms.

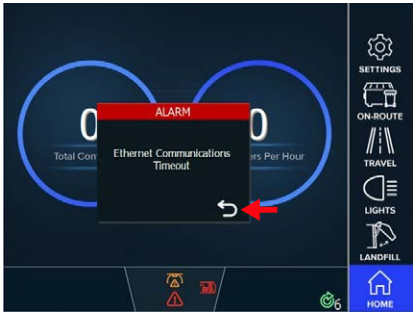

Figure 84.

Note: "Figure 84." is for visual reference only.

Alarms & Warnings List		
Ethernet Communications Timeout	Hydraulic Oil Temp Low	Packer Position Sensor Failed Low
J1939 Network Health Not OK, Verify Network Integrity	Hydraulic Temp Over 180 for 5 Minutes	Packer Cycle Timeout: Exceeded Pressure Too Long
CNG Defuel Valve Open	Lift Extended	Rolling with Lift Extended
Side Door Open Pump Disabled	Side Door Open	Tailgate Open
Hydraulic Oil Temp Too High	Oil Temp Sensor Failed High	Tailgate Unlocked
Low Hydraulic Oil	Oil Temp Sensor Failed Low	Body Raised
Trans Temp High	Body Pressure Sensor Failed High	System Power Off
Filter Bypass Fault	Body Pressure Sensor Failed Low	Pump Off
Low Torque Fault	Packer Position Sensor Failed High	Camera Configuration Error
Hydraulic Oil Temp Too High. Pump Shutdown	Hydraulic Temp Over 210 for 3 Minutes	

Copyright 2026 The Heil Co.
Printed in the U.S.A.

PYTHON LIFT JOYSTICK CONTROLS

A. Joystick Movements

The joystick can be moved forward, backward, sideways and at an angle for the different functions. See the figure the right for the different movements and the functions they control.

1. LIFT RAISE - Pull and hold joystick to raise the lift. Release the joystick to stop the movement of the lift.
2. LIFT LOWER - Push and hold joystick to lower the lift. Release the joystick to stop the movement of the lift.
3. LIFT RETRACT - Move joystick to the left and hold to retract the lift. Release the joystick to stop the movement of the lift.
4. LIFT EXTEND - Move joystick to the right and hold to extend the lift. Release the joystick to stop the movement of the lift.
5. DUMP - Pull joystick down and to the left and hold for lift to move in and up to dump the container. Release the joystick to stop the movement of the lift.
6. UNDUMP - Push joystick up and to the right and hold for lift to move out and down to place container on the ground.
7. Trigger (Dead Man) - This optional trigger on the joystick is used as a dead man switch only. When equipped, it must be depressed when operating the Joystick Lift control functions (raise, lower, in, out functions). If it is released, the joystick lift functions will not operate.

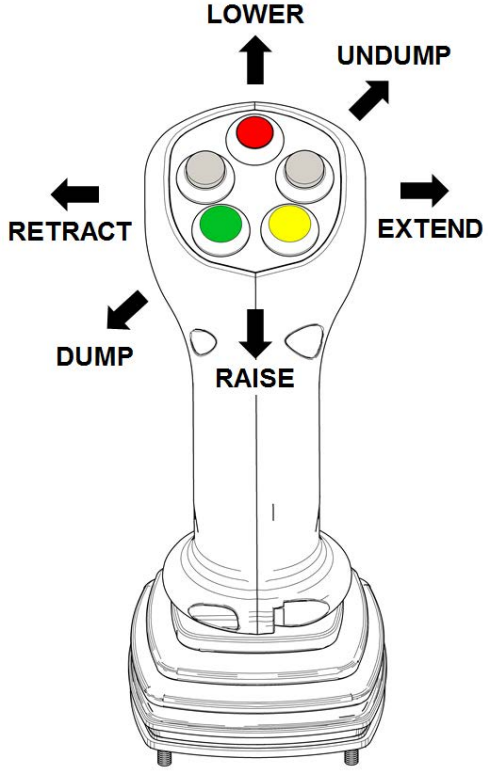

Figure 85. Python Lift Joystick Movements/ Functions

Copyright 2026 The Heil Co.
Printed in the U.S.A.

PYTHON LIFT JOYSTICK CONTROLS

B. 5 Push-Button Controls

The joystick has 5 push-buttons on the handle that control the pump, grabbers, and packer panel extend/retract functions. See **Figure 86** for the different functions of the push-buttons.

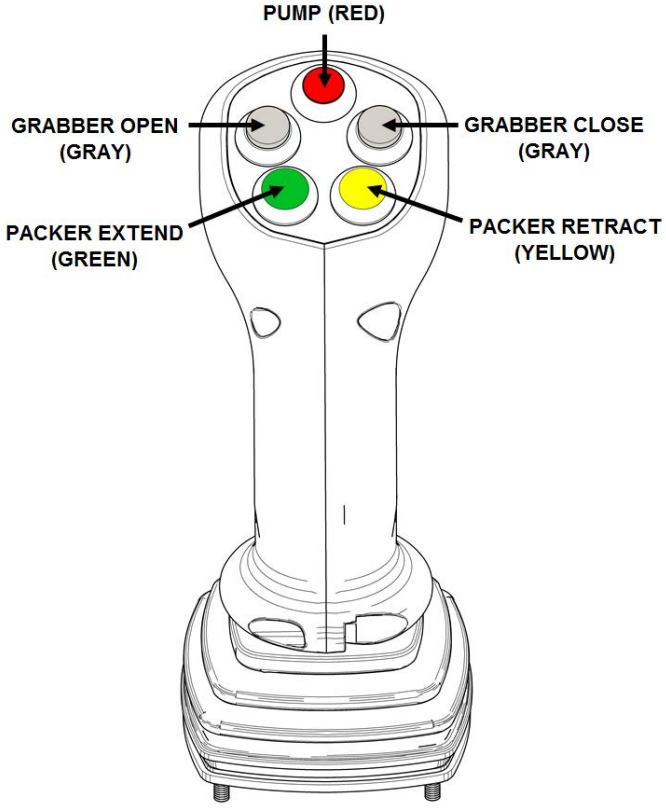

Figure 86. Python Lift Joystick Button Function

NOTICE

The SYSTEM POWER SWITCH (red) must be pulled to the ON position and the pump switch depressed for the packer to work.

1. PUMP ON (RED) - DEPRESS and RELEASE button to activate the Hydraulic Pump. Depress button to turn Pump OFF.
2. PACKER EXTEND (GREEN) - DEPRESS and RELEASE button and the Packer Panel will go through one complete packing cycle.
3. PACKER RETRACT (YELLOW) - DEPRESS and
4. RELEASE button and the Packer Panel will retract to the front of the body.
5. GRABBER OPEN (GRAY) - DEPRESS and HOLD button, when the grabbers get to the desired open position, release the button.
6. GRABBER CLOSE (GRAY) - DEPRESS and HOLD button until grabbers are fully closed around the container. Release button.

For more information on Auto Modes, see **"Features" on page 52.**

Copyright 2026 The Heil Co.
Printed in the U.S.A.

PYTHON LIFT JOYSTICK CONTROLS

B. Joystick On-Display Feature

This feature is designed to provide temporary manual control in the event of a system fault, interface failure, or other emergency conditions.

⚠ CAUTION

Improper use outside of emergency scenarios may result in system instability, equipment damage, and/or safety hazards to personnel.

Figure 87. Joystick On-Display

NOTICE

The joystick on-display feature is intended only for use during operation and maintenance emergency situations. Do not use the joystick on-display feature during routine operations or standard maintenance procedures

Buttons: Will show the press, or not pressed status of the button. Will allow pressed when in Joystick Override.

Override Button: Enables motion via the display. Icon is illuminated green when active.

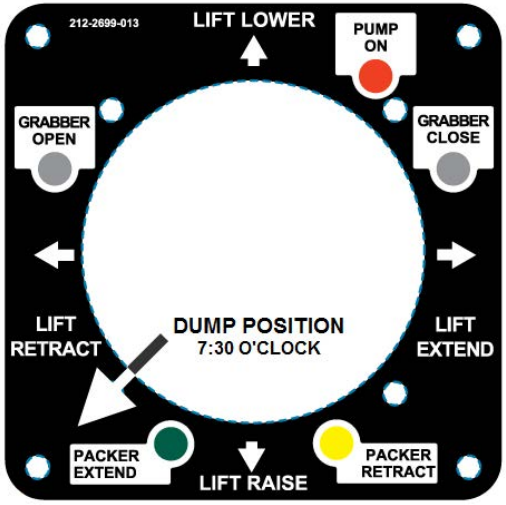

Figure 88. Python Lift Joystick Decal

Copyright 2026 The Heil Co.
Printed in the U.S.A.

SECTION 5
BODY & TAILGATE PROPS

Copyright 2026 The Heil Co.
Printed in the U.S.A.

PROPPING THE BODY

Operators **MUST KNOW** how to **SAFELY** prop up the unit's body. You may need to prop the body up when you clean the inside of the body or for maintenance or repair procedures. Refer to the Service Manual applicable to your truck for detailed instructions on lifting the body.

Observe and obey the following DANGER and WARNING notices while you prop the body with the factory body props.

⚠ DANGER

Keep all parts of your body out from underneath the unit's body and away from the cylinders when raising or lowering the body. SERIOUS INJURY or DEATH will occur if the unit's body suddenly lowers and traps a part of your body.

⚠ WARNING

The unit may roll when you raise the body on unstable or uneven ground and cause SERIOUS INJURY or DEATH to you or bystanders. Do not prop the body while the unit is on unstable or uneven ground. Clear the area of all unnecessary people for this procedure and set the unit on stable and even ground before you start this procedure. Make sure all tire pressures are correct.

NOTICE

Interconnected body props are installed on the unit. Both props MUST be used.

⚠ WARNING

Never drive the unit with the body propped. SERIOUS INJURY or DEATH to you or bystanders and damage to the equipment could occur.

NOTICE

Empty body of all refuse before using body props.

BODY LIFTING DEVICES

We use three different body lifting devices: Service Hoist, Service Hoist Lite, and Serviceable Eject.

A. Service Hoist

This lift requires an on-board 12v power unit. Refer to Service hoist Operation for the specific body propping procedure.

B. Service Hoist Lite

This lift requires an external hydraulic-powered unit to raise the body. Refer to Service Hoist Lite Operation for the specific body propping procedure.

C. Serviceable Eject

This lift requires overhead lifting devices to raise the body. Refer to Serviceable Eject Operation for the specific body propping procedure.

Copyright 2026 The Heil Co.
Printed in the U.S.A.

PROPPING THE TAILGATE

YOU MUST prop the tailgate when you open it for service or maintenance. Use the instructions that follow and prop the tailgate with either the factory-installed tailgate props or a tailgate prop built specifically for your unit. Observe and obey the following DANGER and WARNING notices while you prop the tailgate with the factory tailgate props.

⚠ DANGER

A tailgate is dangerous while you raise or lower it. A prop may fail and cause the tailgate to close suddenly which will result in SERIOUS INJURY or DEATH if you become trapped between the tailgate and the body. Do not walk under or go between the body and the tailgate when the tailgate is in motion, while you prop the tailgate or while the tailgate is propped.

Factory Tailgate Props

YOU MUST USE BOTH of the two support props at the rear of each unit whenever you open the tailgate for service or maintenance.

Refer to the figure on the next page and carefully follow the tailgate propping procedures below.

Follow These Steps:

A. How to Use the Tailgate Props

1. Set unit on flat, stable ground, apply the parking brake, and chock the wheels.
2. Make sure the area around the tailgate is clear of all people.
3. UNLOCK the tailgate. Make sure the tailgate icon is illuminated.
4. Use the tailgate-raise icon on the in-cab display to RAISE the tailgate enough to RELEASE the props and ROTATE them into position. SECURE each prop onto its corresponding prop pin on both sides of the tailgate.
5. LOWER the tailgate until you can SECURE each PROP on its pin.
6. Turn OFF the engine and REMOVE the ignition key.
7. Put the unit in the Lock-Out/Tag-Out. Refer to **“Lock-Out/Tag-Out Procedure” on page 49.**

Copyright 2026 The Heil Co.
Printed in the U.S.A.

PROPPING THE TAILGATE

B. How to Store the Tailgate Props

1. When you finish using the props, take the unit out of the Lock-Out/Tag-Out, insert the ignition key, and start the engine.
2. RAISE the tailgate enough so that you can REMOVE each prop bar from its pin, then ROTATE each prop so that you can put the props in the stored position.
3. SECURE each prop with a pin.
4. LOWER the tailgate until it is completely CLOSED.
5. LOCK the tailgate.

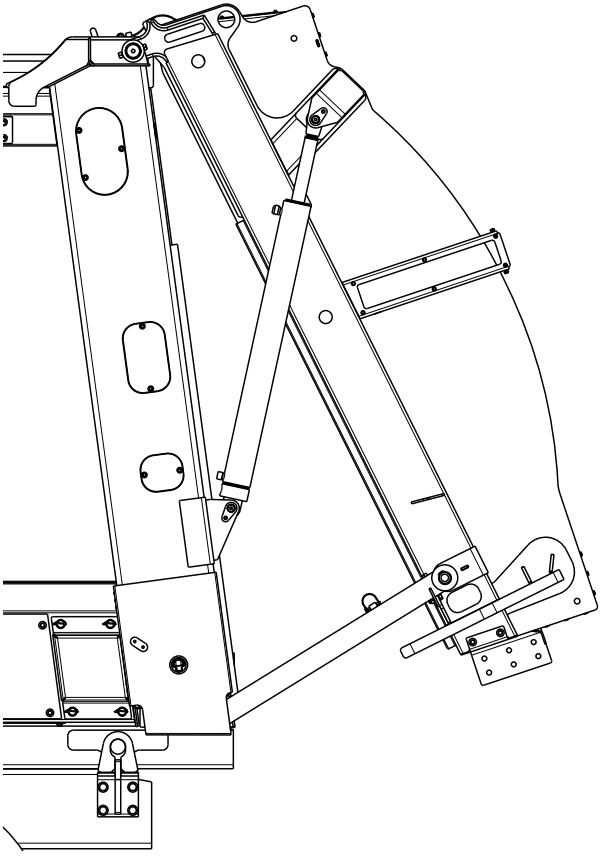

Figure 89. Factory Tailgate Props

Copyright 2026 The Heil Co.
Printed in the U.S.A.

SECTION 6
DAILY CHECKLIST

Copyright 2026 The Heil Co.
Printed in the U.S.A.

DAILY CHECKLIST

Make sure you perform a daily check of the unit. Make copies of the **Refuse Vehicle Daily Inspection** on the next several pages to have the Operator mark completed items before each route. Many checks in the Daily Checklist are maintenance related, such as checking tire pressures and hoses for wear and damage.

Refer to the **Daily Checklist Maintenance Items Chart** below for items to check and the required action.

DAILY CHECKLIST MAINTENANCE ITEMS	
Item	**Required Action**
Low air pressure in tires	Inflate the tire to the correct air pressure given on the tire
Worn tire	Replace when the wear is greater than allowed by law or before the tread is no longer visible
Damaged tire	Replace immediately BEFORE going on route.
Hydraulic pump leaks	Determine the cause of the leak and repair IMMEDIATELY.
Damaged hydraulic pump	Repair or replace IMMEDIATELY
Loose or missing hardware for the hydraulic pump	Tighten loose hardware Replace missing hardware IMMEDIATELY
Damaged decal or decal not readable	Replace decal immediately
Low level of hydraulic oil	Fill the hydraulic oil tank IMMEDIATELY
Worn or damaged hoses	Replace IMMEDIATELY
Leaks at cylinders, hoses or fittings	Tighten loose connection
Loose or missing hardware	Tighten loose connections Replace missing hardware
Worn fiber guards	Replace hoses/fittings as necessary Install new fiber guard on new hoses
Worn or damaged tailgate lock components	Replace worn or damaged components
Loose or missing tailgate lock hardware	Tighten loose hardware Replace missing hardware

Copyright 2026 The Heil Co.
Printed in the U.S.A.

DAILY CHECKLIST

DAILY CHECKLIST MAINTENANCE ITEMS	
Item	**Required Action**
Body structure has loose or missing hardware	Tighten loose hardware Replace missing hardware
Body structure has cracked weld joints	Repair immediately
Body mounting brackets have loose hardware, damaged hardware or cracked welds	Tighten loose hardware Replace missing hardware Repair cracked welds
Air regulator (located in the cab)	90 PSI

Copyright 2026 The Heil Co.
Printed in the U.S.A.

REFUSE VEHICLE DAILY INSPECTION

DATE: _____

UNIT NO. _____

Enter one of the following codes in the Inspection Results Code column:

Use a √ to indicate inspected and no repair, service or adjustment is necessary.
Use an **R** to indicate repair, service or adjustment is necessary.
Use an **N** to indicate vehicle not equipped.

FOLLOW ALL APPLICABLE LOCK-OUT/TAG-OUT PROCEDURES

Printed Name of Operator:

_____

I certify with the signature that follows that I performed a complete inspection in accordance with the following check list on the date given above.

Signature of Operator:

_____

Refer to **"PREVENTIVE MAINTENANCE CHART" on page 111** and **"LUBRICATION GUIDE" on page 114** for additional information and requirements.

Copyright 2026 The Heil Co.
Printed in the U.S.A.

CHECKS AND INSPECTION

The following checks and inspections represent the minimum recommended by HEIL. Please review your company's policies for additional requirements or guidance.

CHECKS AND INSPECTIONS	INSPECTION RESULTS CODE (√/R/N)
INSPECT PER APPLICABLE MANUFACTURER MANUAL	
Cab/Drive	
Wheels and Tires	
Tractor and Chassis Electrical	
Chassis	
Engine & Transmission & Fluid Levels	
Tractor, 5th Wheel and Chassis Lubrication	
REFUSE COLLECTION SYSTEMS AND COMPONENTS	
CAB OUTSIDE AREA	
Check air pressure of tire. Add air if air pressure lower than recommended on the tire before going on route	
Check wear of tire tread. Replace tire worn below tire manufacturer's recommendation or state requirement before going on route	
Check tires for damage. Replace any damaged tire before going on route	
Decals on bumper for damage and readability	
Inspect unit for refuse on or about the engine or exhaust components. **Remove all refuse to prevent a fire**	

Copyright 2026 The Heil Co.
Printed in the U.S.A.

CHECKS AND INSPECTION

CHECKS AND INSPECTIONS	INSPECTION RESULTS CODE (√/R/N)
BODY AND CHASSIS CURB SIDE INSPECTION	
Inspect level of hydraulic oil if tank is mounted on curb side. It must be full. **Add recommended oil as necessary**	
Inspect loader hydraulics for	
Cylinder, hoses and fittings for leaks	
Hoses for wear and damage	
Cylinders for damage	
Loose or missing mounting hardware	
Worn fiber guards – replace hoses/fittings as necessary – MAKE SURE TO INSTALL FIBER GUARD ON NEW HOSE TO PREVENT HYDRAULIC LEAKS REACHING ENGINE SURFACES WHICH CAN CREATE A FIRE HAZARD	
Inspect decals on body prop for damage and readability	
Inspect body structure for damage, loose or missing nuts and bolts and for cracked welds and metal	
Inspect body mounting brackets for cracked welds, missing bolts or nuts or movement	
Inspect decals on curb side body for damage and readability	
Check air pressure of tires. Add air to any tire with air pressure lower than recommended before going on route	
Check wear of tire treads. Replace any tire worn below tire manufacturer’s recommendation or state requirement before going on route	
Check tires for damage. Replace any damaged tire before going on route	
Inspect tailgate raise components	
Cylinder, hoses and fittings for leaks	

Copyright 2026 The Heil Co.
Printed in the U.S.A.

CHECKS AND INSPECTION

CHECKS AND INSPECTIONS	INSPECTION RESULTS CODE (√/R/N)
Hoses for wear and damage	
Cylinder for damage	
Loose or missing mounting hardware	
Inspect tailgate lock components	
Latch components for wear or damage	
Loose or missing mounting hardware	
Tailgate is locked	
TAILGATE	
Inspect decals on tailgate and underride bumper for damage and readability	
Inspect tailgate seal for visible damage	
Inspect underride bumper for damage and loose components	
BODY AND CHASSIS STREET SIDE INSPECTION	
Tailgate is locked	
Inspect tailgate lock components	
Latch components for wear and damage	
Loose or missing mounting hardware	
Inspect tailgate raise components	
Cylinder, hoses and fittings for leaks	
Hoses for wear and damage	
Cylinder for damage	
Loose or missing mounting hardware	

Copyright 2026 The Heil Co.
Printed in the U.S.A.

CHECKS AND INSPECTION

CHECKS AND INSPECTIONS	INSPECTION RESULTS CODE (√/R/N)
Inspect pump for leaks	
Inspect pump for damage or loose hardware	
Check air pressure of tires. Add air to any tire with air pressure lower than recommended before going on route	
Check wear of tire treads. Replace any tire worn below tire manufacturer's recommendation or state requirements before going on route	
Check tires for damage. Replace any damaged tire before going on route	
Inspect all decals on curb side body for damage and readability	
Inspect body structure for damage, loose or missing nuts and bolts and for cracked welds	
Inspect body mounting brackets for cracked weld, missing bolts or nuts or movement	
Inspect decals on body prop for damage and readability	
Inspect level of hydraulic oil if tank is mounted on streetside. It must be full. **Add recommended oil as necessary**	
Battery disconnect switch is turned to OFF then:	
Check wiring and battery cables from the battery box to the engine starter for wear and other damage. **IMMEDIATELY REPLACE WORN OR DAMAGED WIRING**	
Check wiring and cables for loose connections. **IMMEDIATELY TIGHTEN LOOSE CONNECTIONS**	
OPERATION OF UNIT - Skip this section if the unit will not be operated today	
Close the air tank drain valve	
Turn battery disconnect to ON	
Apply parking brake	
Make sure the starter interlock operates – make sure unit will not start in gear	

Copyright 2026 The Heil Co.
Printed in the U.S.A.

CHECKS AND INSPECTION

CHECKS AND INSPECTIONS	INSPECTION RESULTS CODE (√/R/N)
Start the engine. Icons and gauges show normal operation of engine	
Make sure the parking brake does not allow the vehicle to move forward or reverse at idle	
Make sure the throttle advance (if equipped) operates only in neutral	
Make sure all cab, body and tailgate lights operate	
Make sure the backup alarm and light operate	
Make sure all people not necessary and any hazards are clear of the area and then:	
If equipped, engage the PTO	
Pull the System Power Switch UP – the switch's red light is ON and the PUMP icon is illuminated on the in-cab display	
Push the System Power Switch DOWN – the switch's red light is OFF and the PUMP icon is not illuminated on the in-cab display	
The FILTER CHANGE light is OFF. If not, and the filter was not changed before starting the unit, report this to your supervisor immediately. DO NOT go on route until the unit is repaired if the filter was not changed	
Operate the packer in the auto mode – the packer does one extend and retract cycle	
Operate the packer in the manual mode – manually extend and retract the packer	
Start a packer extend operation then press the Retract button. The packer should stop extending and move towards the cab.	
Start a packer retract operation then press the Extend button. The packer should stop retracting and move towards the body.	
The TRANS TEMP light is OFF. If not, report this to your supervisor immediately. Do not go on route until the unit is repaired	
Operate all four single functions of the lift with the standard Python joystick controls:	
OUT, IN, RAISE, LOWER, DUMP and UNDUMP	

Copyright 2026 The Heil Co.
Printed in the U.S.A.

CHECKS AND INSPECTION

CHECKS AND INSPECTIONS	INSPECTION RESULTS CODE (√/R/N)
Do a Coordinated Lift cycle with the standard Python joystick controls.	
If the body does not have refuse, use the in-cab display and:	
Open the tailgate	
The T/G UP light and alarm are on.	
Set the tailgate props	
Inspect the tailgate seal for damage	
Store the tailgate props and raise the tailgate completely	
Close the tailgate	
The T/G UP light and alarm are off.	
Make sure the tailgate icon is not illuminated on the in-cab display.	
Move the lift arm to the TRANSIT position – lift arm is stowed and the grabber is fully OPEN and against the unit OR move the lift arm to the alternate position – lift arm is IN and the grabber is in the hopper	
Keep the engine running and continue the inspection	
IN-CAB INSPECTION	
Inspect all in-cab decals for damage and readability	
Do one automatic packer cycle	
Make sure the following in-cab display icons are OFF:	
Body T/G UP	
TRANS TEMP	
FILTER CHANGE	
PUMP	

Copyright 2026 The Heil Co.
Printed in the U.S.A.

CHECKS AND INSPECTION

CHECKS AND INSPECTIONS	INSPECTION RESULTS CODE (√/R/N)
If equipped, check the operation of each camera	
FINAL INSPECTION	
While you walk completely around the vehicle, look for:	
Fluid leaks	
Cracked or damaged welds and metal	
Loose or missing bolts, nuts and clamps	

Copyright 2026 The Heil Co.
Printed in the U.S.A.

SECTION 7
BEFORE GOING ON ROUTE

Copyright 2026 The Heil Co.
Printed in the U.S.A.

BATTERY DISCONNECT SWITCH

The battery box is typically located on the streetside of the chassis frame near the front of the body, however it can be mounted at a different location on different chassis. Become familiar with the location of the battery box and battery disconnect switch on your unit.

1. You must turn the battery disconnect switch to the OFF position whenever the unit is shut off for any length of time – especially when the unit will be left unattended.
2. You must turn the battery disconnect switch to the ON position whenever you will use the unit.
3. You must check the position of the battery disconnect switch as part of the daily inspection.

NOTICE

Battery cables must be securely anchored and not rubbing other equipment. Cable insulation must be free of damage and abrasion. Inspect weekly.

NOTICE

Always disconnect the battery before welding on the chassis or body.

DAILY CHECKLIST

See the **“Daily Checklist” on page 85** for the daily checks and procedures checklist. Make a copy of the check list.

⚠ WARNING

A unit that needs service or repair can malfunction and create a dangerous condition. A part failure during operation can cause SERIOUS INJURY or DEATH to a person or damage to the unit. Repair or replace any failed or defective part immediately.

Copyright 2026 The Heil Co.
Printed in the U.S.A.

BEFORE STARTING A ROUTE

Before you start a route, do the following:

- ☐ Perform an inspection of the unit with the **“Daily Checklist” on page 85.**
- ☐ Check the **“Hydraulic Oil Level” on page 98.**
- ☐ **“Cycle All Hydraulic Functions” on page 98.**
- ☐ If equipped, close the side access door**.**
- ☐ Check the **“Checking Travel Or “In-Transit” Position” on page 100.**

Use the Daily Checklist to Inspect the Unit

It is the operator’s responsibility to do a visual inspection of he unit and make sure the unit is in good operating condition before you start a route.

The requirements for the daily checks are given in the **“DAILY CHECKLIST” on page 84**. Make sure you complete the inspections on the checklist and you make all entries, including your signature.

HYDRAULIC OIL WARM-UP PROCEDURE

It is necessary to warm up the unit’s hydraulic oil before you start your daily route operation or to check the oil level. The hydraulic oil is sufficiently warmed when the temperature is between 120° and 160°F.

⚠ WARNING

Moving parts on the unit are dangerous. SERIOUS INJURY or DEATH can occur if a person is struck by the equipment. Clear all people from the area before you operate the unit.

Follow the steps below to warm up the hydraulic oil.

1. START the TRUCK and let the engine idle.
2. APPLY the PARKING BRAKE and make sure it holds.
3. ENGAGE the HYDRAULIC PUMP for approximately five minutes.
4. MAKE SURE the AREA IS CLEAR of all unnecessary people BEFORE you operate the controls.
5. OPERATE the PACKER functions through ten (10) cycles while the engine idles.
6. Make sure the oil temperature on the site gauge is between 120° and 160°F. If not, repeat step 5.
7. Check for fluid leaks. Repair if necessary.

Copyright 2026 The Heil Co.
Printed in the U.S.A.

CHECKING HYDRAULIC OIL

Preparing The Unit To Check The Hydraulic Oil Level

Before checking the oil level or adding oil, make sure the oil is warmed up and the unit is in the following position with all cylinders collapsed:

- Truck – on level ground
- Tailgate and Body – fully down and locked
- Packer Panel – in the in-transit position with all cylinders retracted
- Lift Arm (if equipped) – is fully retracted

Hydraulic Oil Level

Inspect the hydraulic oil level (after warming up the oil) daily or every eight (8) hours, whichever comes first. Fill as necessary.

Cycle All Hydraulic Functions

Follow These Steps:

1. Operate the lift arm, grabbers, packing panel, body and tailgate functions two or three times each. See **"FEATURES, CONTROLS, SWITCHES, & ICONS" on page 51** for proper operation of controls.
2. Put the unit back in the position described above and check the oil level again.
3. Add oil if necessary. Refer to the Service Manual applicable to your truck for instructions for filling the oil tank.

Current Heil standard hydraulic oil is **Shell Tellus S2 VX 32**. Please see product TDS and MSDS for more detail information about it. We strongly recommend to use it on Heil products to get best system performance and oil service life. Refer to the Service Manual applicable to your truck for other approved hydraulic oils.

NOTICE

Cold weather operation requires special oil considerations. Viscosity should not exceed 7500 SSU at lowest startup temperature. Continuous operation should range between 40–1000 SSU for all temperature ranges.

NOTICE

Contamination is a hydraulic system's worst enemy. DO NOT let dirt enter the system. Use a clean rag and remove dirt or other contamination around any system component before you disconnect or remove it. While you fill the reservoir, filter the oil through a 200 mesh (or finer) screen. NEVER use a cloth to filter the oil.

Copyright 2026 The Heil Co.
Printed in the U.S.A.

HYDRAULIC OIL TANK NOMENCLATURE

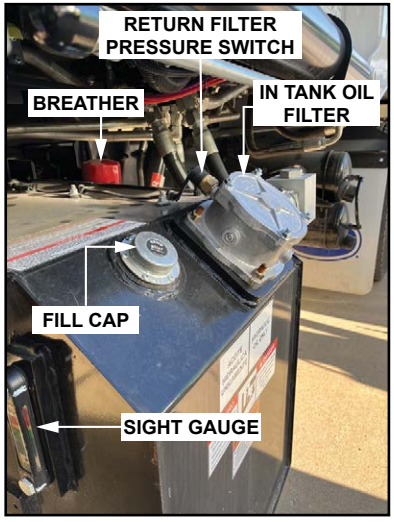

Figure 91.

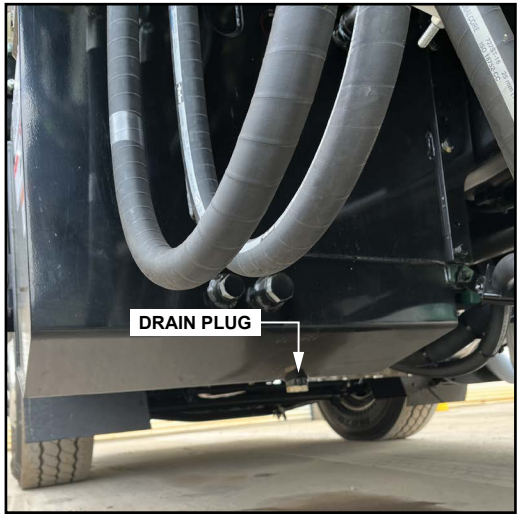

Figure 92.

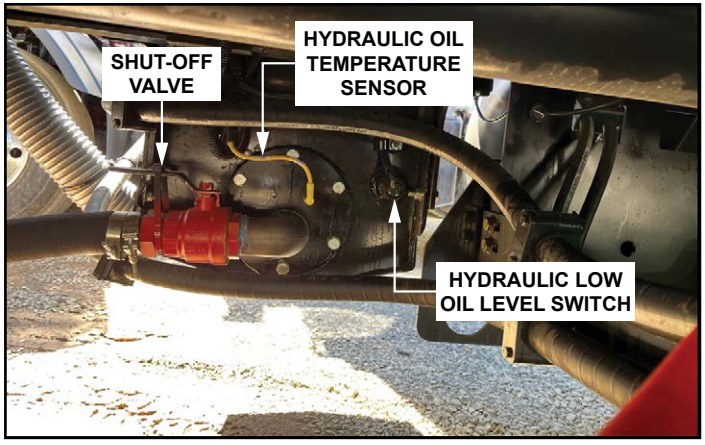

Figure 90.

Copyright 2026 The Heil Co.
Printed in the U.S.A.

CHECKING TRAVEL OR “IN-TRANSIT” POSITION

When the unit is not on-route and you are traveling to and from the landfill or transfer station, make sure the unit is in the In-Transit Position as follows:

- The body is fully LOWERED and SECURED.
- The tailgate is DOWN and LOCKED.
- The lift arm is in a transit position:
  - The lift arm is fully stowed
  - The grabber arm assembly is against the chassis and the grabbers are fully open
- The packer panel is:
  - For an empty unit, it is at the front of hopper.
  - For a unit with refuse in the body, it is up tight against refuse.
- The PTO or pump switch is OFF.
- The mirrors are properly adjusted and clean.
- The side access door and sump doors are CLOSED and LATCHED.
- ALL outside lights operate properly.
- The street side driver’s station is used for traveling.

Use of Curbside Drive

If equipped, drive from the curbside driver position **ONLY** on the collection route. **DO NOT** use this station during travel to and from a route, landfill, or transfer station. Please check with your supervisor to determine if your company has a specific procedure.

Copyright 2026 The Heil Co.
Printed in the U.S.A.

SECTION 8
ON-ROUTE OPERATION PROCEDURES

Copyright 2026 The Heil Co.
Printed in the U.S.A.

DRIVING TO PICK-UP LOCATIONS

Whenever you drive to and from a route, along the route, to the landfill, etc., make sure the unit is set up in the **“Checking Travel Or “In-Transit” Position” on page 100:**

- The body is fully LOWERED and SECURED.
- The tailgate is DOWN and LOCKED.
- The lift arm is in a transit position:
  - The lift arm is fully stowed
  - The grabber arm assembly is against the chassis and the grabbers are fully open
- The packer panel is:
  - For an empty unit, it is at the front of hopper.
  - For a unit with refuse in the body, it is up tight against refuse.
- The PTO or pump is OFF.
- The mirrors are properly adjusted and clean.
- The side access door and sump doors are CLOSED and LATCHED.
- ALL outside lights operate properly.
- The street side driver’s station is used for traveling.

Use of Curbside Drive

If equipped, drive from the curbside driver position **ONLY** on the collection route. **DO NOT** use this station during travel to and from a route, landfill, or transfer station. Please check with your supervisor to determine if your company has a specific procedure.

Copyright 2026 The Heil Co.
Printed in the U.S.A.

LIFTING AND LOADING REFUSE WITH THE PYTHON LIFT ARM

Use the following procedures at each stop along the route to load refuse into the unit. Observe all DANGER and WARNING hazard alerts.

NOTICE

If local rules and laws require more clearance, you must follow them.

1. Move the unit to a position that is best to load the refuse with the lift arm. Practice this maneuver for best results.
2. ADJUST the container spot mirror for BEST overhead vision of the hopper while you raise container.
3. PULL the SYSTEM POWER switch UP (and engage the PTO if equipped). The PUMP ON light should be ON.

NOTICE

If the engine RPMs go above 900, both pumps will be shut off and the lift will not operate.

4. The Operator's foot is on the service brake and the engine RPMs are at or below 900.
5. Make sure the loading area is clear of all unnecessary people.
6. Make sure the packer is in the **"Auto/Manual Pack Mode" on page 52**.

Auto-Lift Mode

DANGER

Contact with overhead electric lines will cause SERIOUS INJURY or DEATH. Check overhead clearance before raising the container. If contact occurs, do not touch any metal parts. Stay in the cab until help arrives.

NOTICE

If local rules and laws require more clearance, you must follow them.

All units are equipped with the Auto-Lift feature. This feature allows the operator to partially automate the lifting, dumping and returning the refuse container to the ground.

Auto-Lift

1. Toggle ON/OFF by holding grabber open and close buttons simultaneously for five (5) seconds (until the in cab alarm stops sounding).
2. Closing grabbers will initiate Auto-Lift sequence. Operator must hold grabber closed button to continue cycle.
3. Container will raise and retract automatically to the dump position.
4. Operator manually replaces cart to desired position on the ground.
5. Pressing and holding grabber release (open) button will return lift to stowed position.
6. Go to the next stop on the route.

Copyright 2026 The Heil Co.
Printed in the U.S.A.

LIFTING AND LOADING REFUSE WITH THE PYTHON LIFT ARM

Manual Lift Mode

⚠ DANGER

Contact with overhead electric lines will cause SERIOUS INJURY or DEATH. Check overhead clearance before raising the container. If contact occurs, do not touch any metal parts. Stay in the cab until help arrives.

NOTICE

If local rules and laws require more clearance, you must follow them.

1. Command Extend with the joystick to make the lift extend towards the container. During reach the lift will retain its stowed height in close to the truck however reaching out farther from the unit requires the operator to control the lift height simultaneously while reaching.

NOTICE

Make sure the container is in the center of the grabbers. DO NOT use the tips of the grabbers to squeeze and lift the container.

2. Command Grab when the container is in the position. Grabbing the container lower in the strike zone will position the container farther into the hopper during full dump.
3. Command Dump by moving the joystick into the dump (7:30) position. The dump position is “sweet spot” that splits the in and up functions to get a perfect dump motion. Finding the dump position with the joystick usually requires practice to obtain a consistent and smooth dump motion. Amateur operators should error to the in position of the joystick rather than up while dumping. Erring to the up position will cause premature dumping and result in trash spilled on the ground.
4. Container Placement - Command down by moving the joystick forward. When the container is at the appropriate level, release and stow the grabbers. Note: If it is necessary to return the container to it’s original position, beginner operators should completely lower the container first and then reach out as required. Only experienced operators should attempt to reach out while lowering the lift simultaneously.
5. Go to the next stop on the route.

Operator Proficiency

While learning to operate the Python, the operator should not concentrate on speed (except dumping) but should focus on making precision movements with the lift. Exception to slow operation should be taken during the dump function. The operator must be aggressive while commanding the dump function to obtain a smooth dump motion without spilling trash on the ground. Once precision movements are mastered, lift speed will naturally occur. The joystick should be considered as an extension of the operator’s body, as the precision movements are mastered and veteran operational status and experience is obtained.

Copyright 2026 The Heil Co.
Printed in the U.S.A.

COMPACTING THE LOAD

Loads can be compacted automatically or manually. In addition to the auto-pack mode during loading, you can pack the refuse manually any time after loading the refuse in the hopper. You can use the in-cab controls for the packer panel to compact the load again with a manual cycle.

Many factors affect how often you need to compact the load, including the operator's experience.

Select-O-Pack™

Select-O-Pack is a standard feature on all Mobile Controller controlled Heil Automated Side Loaders. This feature automatically cycles the Auto-Pack after a predetermined number of lift cycles. Refer to **"Select-O-Pack" on page 54** in **"Features" on page 52** for instructions on setting the Select-O-Pack feature.

Packing Near Full Load

When the body is near a full load, the packing cylinder will not extend fully before returning to the front of the hopper.

Packing On-The-Move

Heil DuraPack Python units can pack on-the-move. This means you can operate the packing mechanism while the vehicle is moving, as well as when it is stationary. The default mode of the body pump is the AUTO PACK mode. This allows for continuous packing while the SYSTEM POWER switch is set to ON (and if equipped, the PTO is engaged), the pump is ON and the unit's engine is running.

You can pack-on-the-move when the Mobile Controller determines that all conditions are OK. The Mobile Controller shuts down the pump system when the engine RPMs are above safe operating speeds or the Mobile Controller determines that conditions are not correct for pump operation. The packing cycle will not begin if the RPMs are above a safe operating speed.

Refer to **"Auto/Manual Pack Mode" on page 52** in **"Features" on page 52** for operation of the Auto Pack feature.

Achieving Payloads

Read this section for advice and tips on how to pack the most efficient loads with your unit.

Payloads in any refuse/waste handling vehicle will vary greatly, depending on the type of material loaded. Dry bulk cardboard and reconstruction/building materials, Styrofoam, foam packing materials, loose plastic, etc. cannot be compressed and packed as effectively as wet, soft, garbage type materials. If dry materials can be mixed with some wet material, more effective payloads can be achieved.

Follow these techniques to attain greater efficiency in packing the load in your unit:

1. After you empty the first few bins, the body begins to fill and material can begin to "fall back" into the hopper
2. If the route allows, mix some wet bins in with dry bins. This helps compact the dry material more. Wet material also helps lubricate the body, which results in better packing.

Copyright 2026 The Heil Co.
Printed in the U.S.A.

LEAVING THE ROUTE FOR THE LANDFILL / TRANSFER STATION

At the end of the route, or when the unit has a full load, prepare the unit to go to the landfill.

- The body is fully LOWERED and SECURED.
- The tailgate is DOWN and LOCKED.
- The lift arm is in a transit position:
  - The lift arm is fully stowed
  - The grabber arm assembly is against the chassis and the grabbers are fully open
- The packer panel is:
  - For an empty unit, it is at the front of hopper.
  - For a unit with refuse in the body, it is up tight against refuse.
- The PTO or pump switch is OFF.
- The mirrors are properly adjusted and clean.
- The side access door and sump doors are CLOSED and LATCHED.
- ALL outside lights operate properly.
- The street side driver's station is used for traveling.

Use of Curbside Drive

If equipped, drive from the curbside driver position **ONLY** on the collection route. **DO NOT** use this station during travel to and from a route, landfill, or transfer station. Please check with your supervisor to determine if your company has a specific procedure.

Copyright 2026 The Heil Co.
Printed in the U.S.A.

SECTION 9
LANDFILL / TRANSFER STATION / RECYCLE CENTER PROCEDURES

Copyright 2026 The Heil Co.
Printed in the U.S.A.

SETTING UP AN EJECT UNIT FOR UNLOADING

Set up the Unit

After positioning unit on firm stable ground for unloading at the landfill, set up as follows.

⚠ CAUTION

Make sure that all individuals are clear of the point of operation before actuating controls. Be ready to stop or reverse the function.

1. Shift the transmission to NEUTRAL.
2. APPLY the parking brake and MAKE SURE it is holding.
3. PRESS and RELEASE the pump (red) button on the Joystick to activate the Pump.
4. UNLOCK the tailgate by PUSHING and HOLDING the tailgate latch toggle icon (located on the in-cab display), until the tailgate is completely unlocked.

Raise the Tailgate

⚠ DANGER

A tailgate in motion is dangerous. SERIOUS INJURY or DEATH will occur if a person is struck by a moving tailgate or becomes trapped between the tailgate and the body. Clear the area near the tailgate of all unnecessary people before you lower the tailgate.

1. PRESS the TAILGATE UP/DOWN icon to UP and HOLD the icon until the tailgate is COMPLETELY raised, which is about 30º above the body. See the figure below.
2. RELEASE the icon.

NOTICE

The BODY TAILGATE UP notification turns ON and the in-cab alarm will sound to indicate the tailgate is open.

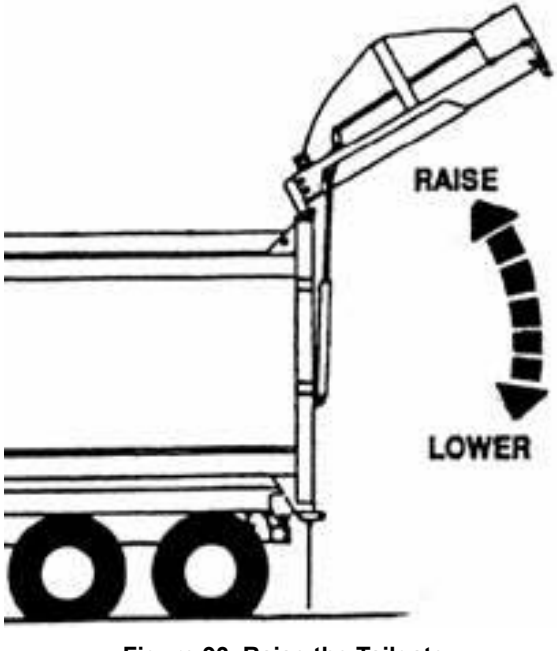

Figure 93. Raise the Tailgate

Copyright 2026 The Heil Co.
Printed in the U.S.A.

SECTION 10
END OF DAY PROCEDURES

Copyright 2026 The Heil Co.
Printed in the U.S.A.

END OF DAY PROCESS

Parking the Unit

1. Park the unit in the space designated by your employer/supervisor.
2. Set the parking brake.
3. Refer to the chassis manufacturer's manual for parking instructions, or follow your organization's approved procedure.

Final Inspection

Perform a final inspection of the unit:

1. Clear the area of all people.
2. Start the engine if it is not running.
3. Make sure all lights and in-cab control switches operate correctly.
4. Shift the transmission into reverse and press the service brake. The backup alarm should activate; if it does not, notify your employer or supervisor immediately.
5. Check the unit for fluid leaks from the hoses, cylinders, valves, pump and fittings. Report any leaks to your employer/supervisor.
6. Make sure all cylinders (except tailgate lock cylinders) are in their retracted position..
7. APPLY the parking brake.
8. Put the transmission in neutral and turn the engine OFF.
9. Put the unit in the **"LOCK-OUT/TAG-OUT PROCEDURE" on page 48** mode.
10. Open the air tank drain valve.
11. Turn the battery disconnect switch to OFF.
12. Follow the company policy for locking the cab doors.

Reports to Employer/Supervisor

Complete any reports required by your employer/supervisor. If you found any problems during the final inspection, prepare the necessary report for the employer/supervisor.

Ignition Keys

Put the ignition keys in a secure storage area designated by your employer/supervisor.

Copyright 2026 The Heil Co.
Printed in the U.S.A.

SECTION 11
PREVENTIVE MAINTENANCE CHART

Copyright 2026 The Heil Co.
Printed in the U.S.A.

BODY PREVENTIVE MAINTENANCE CHART

Preventive maintenance must be performed to ensure the safe and reliable operation of your unit. Use the chart below as a guideline for when essential items should be checked and serviced.

	*HOURS OF OPERATION						
COMPONENT/SYSTEM	**8**	**20**	**40**	**200**	**1000**	**2000**	**CHECK/SERVICE**
Hydraulic System	☑						Check oil level – add if necessary
			☑				Check cylinders, pump, hoses, tubes, fittings, and adapters for leaks. Check hoses for cracks, crushes, and cover blisters. Repair or replace if necessary with genuine Heil parts. Any replacement hose should be the same size and pressure rating as listed on the original OEM hose.
			☑				Check Control valve seals for leaks. Repair or replace if necessary.
					☑		Replace filter after first 30 days of operation, then every 6 months or 1000 hours of operation OR when filter bypass light is ON.
					☑		Replace tank breather filter every time you replace filter element.
						☑	Drain, flush, and refill. Change filter element.
Electrical, Battery Cables	☑						Check for proper operation.
			☑				Check battery cables from battery to starter for loose cables, rubbing or damage and abrasions to cables. Replace if necessary.
Operator Controls	☑						
Front Mount Pump or Power Take-Off (PTO)			☑				Check seals for leaks and operation. Replace if necessary

Copyright 2026 The Heil Co.
Printed in the U.S.A.

BODY PREVENTIVE MAINTENANCE CHART

	*HOURS OF OPERATION						
COMPONENT/SYSTEM	**8**	**20**	**40**	**200**	**1000**	**2000**	**CHECK/SERVICE**
			☑				Check drive line for smooth operation. Replace as necessary.
			☑				Check set screws for tightness. Tighten as necessary.
			☑				Make sure keys are in place. Replace if necessary.
				☑			For greaseable PTOs (non-wet spline), remove the pump's bolt flange about 2 inches from the PTO and apply grease to female pilot of PTO pump flange. Failure to lubricate female pilot of PTO as given may cause damage to the pump shaft. Greasing is NOT required on wet spline PTOs such as the Chelsea 890/897 series.
Grease Fittings		☑	☑				Lubricate as shown on **"Body Lubrication Guide" on page 115** and the **"Lift Arm Lubrication Guide" on page 116**.
Body Undercoating						☑	Inspect body undercoating and repair as necessary.
Tailgate Seal Integrity	☑						
Packer/Ejector Cylinder Preventive Maintenance	☑		☑	☑			See Packer/Ejector Cylinder Preventive Maintenance in the Service Manual applicable to your truck.
Packer/Ejector Panel Bolt-in Cylinder Mount Bolts				☑			Check for tightness. Bolt torques should be 192 Ft-Lbs. (lubricated threads)
*** Daily = 8 hrs. or 20 hrs. Weekly = 40 hrs. Monthly = 200 hrs. 6 Months = 1000 hrs. Yearly = 2000 hrs.**							

Copyright 2026 The Heil Co.
Printed in the U.S.A.

SECTION 12
LUBRICATION GUIDE

Copyright 2026 The Heil Co.
Printed in the U.S.A.

BODY LUBRICATION GUIDE

Clean fittings before applying grease and always pump enough grease into joint to remove the old grease. Wipe off excess grease. Lubricate movable mechanical parts without fittings every 60 days with non-detergent engine oil.

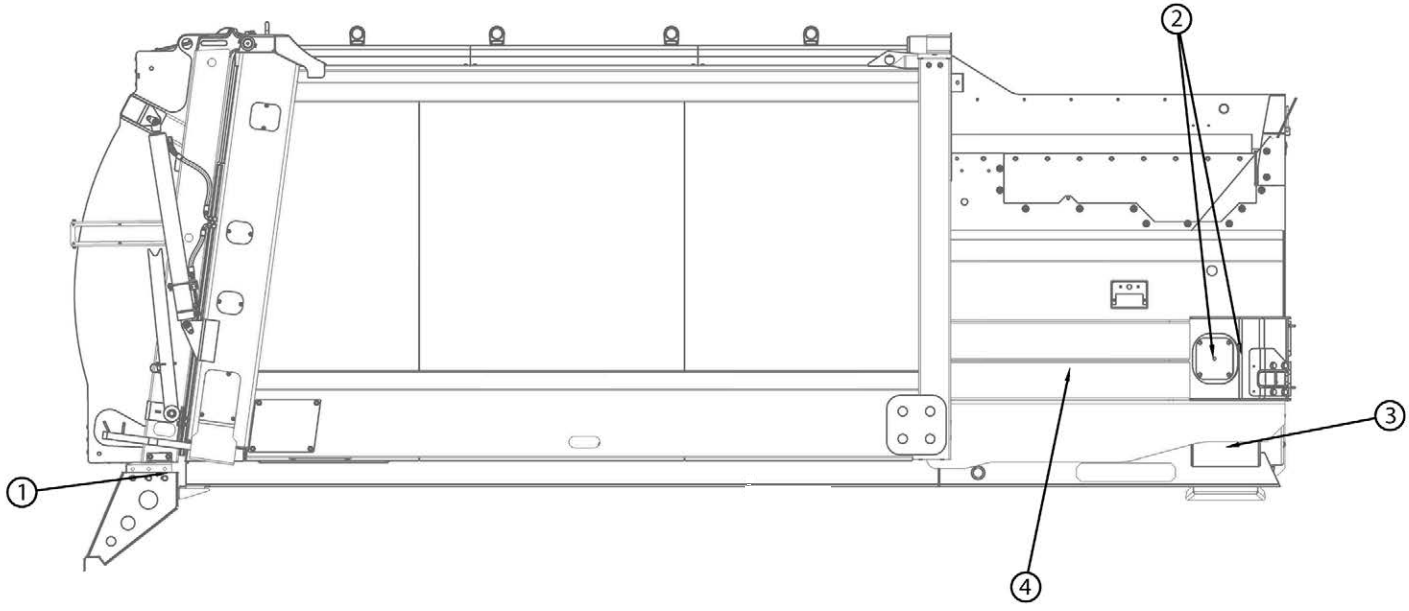

Figure 94.

REF NO.	DESCRIPTION	QTY.	FREQUENCY
1	Tailgate Lock Bearing	2	Weekly/Every 50 Hours
2	Packer Cylinders	2	Weekly/Every 50 Hours
3	Sump Hinge	1	Weekly/Every 50 Hours
4	Packer Panel Tracks	2	Monthly/Every 200 Hours

Copyright 2026 The Heil Co.
Printed in the U.S.A.

LIFT ARM LUBRICATION GUIDE

Clean fittings before applying grease and always pump enough grease into joint to remove the old grease. Wipe off excess grease. Lubricate movable mechanical parts without fittings every 60 days with non-detergent engine oil.

REF NO.	DESCRIPTION	QTY.	FREQUENCY
1	Reach Pivot Link	4	Every 20 Hours
2	Rocker Assembly	1	Every 20 Hours
3	H-Beam Assembly	6	Every 20 Hours
4	Level Link	2	Every 20 Hours
5	Reach Cylinder	2	Every 20 Hours
6	Lift Cylinder	2	Every 20 Hours
7	Grabber Cylinder	2	Every 20 Hours
8	Grabber Beam	4	Every 20 Hours

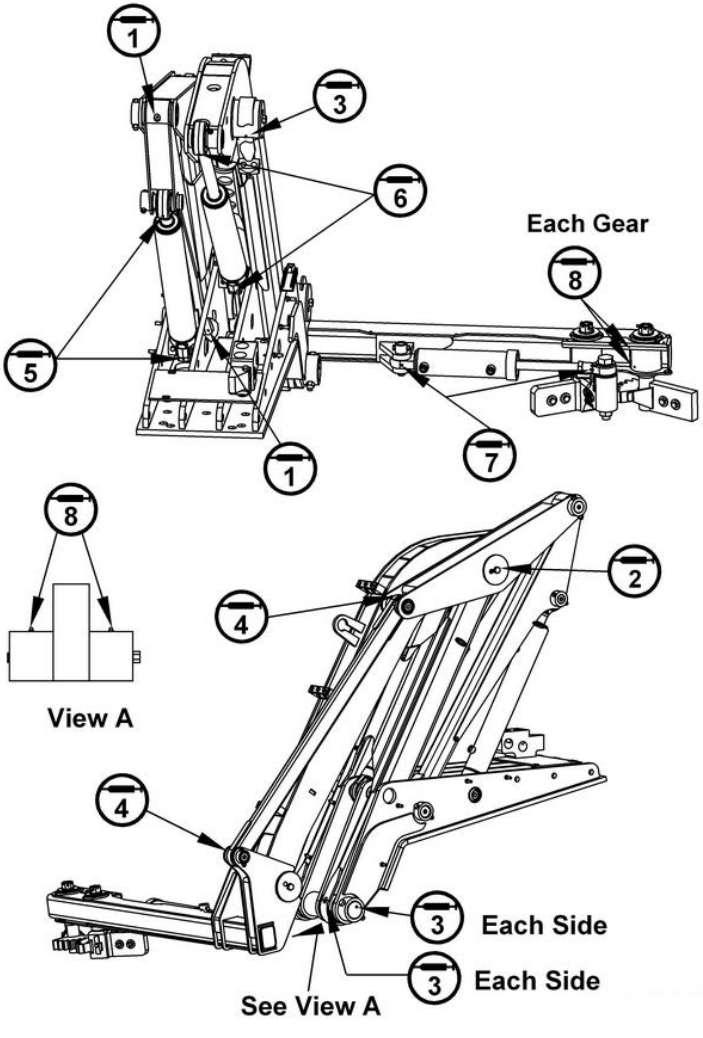

Figure 95.

Copyright 2026 The Heil Co.
Printed in the U.S.A.

INDEX

A

Accident 19
Achieving Payloads 105
Auto 19
Auto-Lift 19, 103
Auto-Lift Mode 103
Auto-Pack Mode 105

B

Battery Disconnect Switch 96
Before Starting A Route 97
Bin 19
Body 19
Body 14
Body And Cab Decal Images 31–40
Body Lubrication Guide 115–116
Body Preventive Maintenance Chart 112–113
Body Props 14

C

Cab Controls 13
California Specific Warning Signals 56
Care Of Decals 46, 47
Caution 19
Check Hydraulic Oil Level 98
Collapsed Position 19
Compacting The Load 105
Cycle All Hydraulic Functions 98

D

Daily Checklist 85
Daily Inspection 87
Danger 19
Driving To Pick-Up Locations 102

E

End Of Day Procedures 110
Extend/Extend 19

F

Final Inspection 110
Front Head 19
Fully Retracted Position 19

G

Grabber 19
Grip 19

H

Harm 19
Hazard 19
Hopper 19
Hopper 13
How To Use This Manual 3
Hydraulic Oil Tank 17
Hydraulic Oil Tank With Sight Gauge 99
Hydraulic Oil Warm Up Procedure 97
Hydraulic Pump 13

Copyright 2025 The Heil Co.
Printed in the U.S.A.

INDEX

I

Ignition Keys 110
Illuminate 20
In-Cab Alarm 52
In-Cab Main Control Panel 57–59
Incident 20
Interlock 20
“In-Transit” Position 100

L

Latched 20
Lift Arm 19
Lift Arm 13
Lifting And Loading Refuse With The Python® Lift Arm 103–106
Lift Lubrication Guide 33
Lift Nomenclature 18
Lock 20
Locking Out The Unit 50
Lock-Out/Tag-Out Procedure 49, 50

M

Manual Lift Mode 104
Mobile Controller 17, 19

N

Nomenclature 11
Notice 20

O

Off/Off 20
On/On 20
Operator 20
Operator Controls 17

P

Packer/Eject Panel & Cylinders 14
Packing Near Full Load 105
Packing On-The-Move 105
Parking The Unit 110
PN 20
Precautionary Statements 23
Pressure Washer Precautions 46
Product Nomenclature 11
Propping The Body 81
Propping The Tailgate 82–83
Pto 20
Python Lift Joystick Controls 77–79

R

Raise The Tailgate 108
Reports To Employer/Supervisor 110
Retract/Retract 20
RPM 20

S

Select-O-Pack™ 52
Serial Plate Location 9
Setting Up An Eject Unit For Unloading 108
Side Access Door 21
Specifications 8

Copyright 2025 The Heil Co.
Printed in the U.S.A.

T

Tailgate Latches 15
Tailgate Props 15
To The Mechanic 6, 7
To The Operator 5
To The Owner 4

U

Unit 21
Unlatched 21
Unlock 21
Use Of Curbside Drive 102

W

Warning 21
Warranty Claims And Inquiries 7

Copyright 2025 The Heil Co.
Printed in the U.S.A.

HEIL ENVIRONMENTAL WARRANTY STATEMENT

The Heil Co. d/b/a Heil Environmental ("Heil") warrants its solid waste collection equipment to be free from defects in material and workmanship under normal use for a period of one (1) year or 2000 hours of operation (whichever comes first) from the date of equipment In-Service or during the period of coverage offered by an extended warranty program, when proper service and maintenance as described in Heil Service Bulletins and Parts & Service Manuals are performed. The standard or extended equipment warranty is not transferable except for sales demonstration units.

This warranty is expressly limited to the repair or replacement of any component or part thereof, of any such refuse or recycling collection body manufactured by Heil that is proven to Heil's satisfaction to have been defective in material or workmanship. Such components or parts shall be repaired or replaced at Heil's option without cost to the standard purchaser for parts and labor provided such unit is returned to an authorized Heil Distributor for replacement or repair. The repair or replacement must be made during the standard or extended warranty coverage period. Before any warranty can be allowed on new equipment, a validated warranty registration form must be on file with Heil's Customer Service Department within sixty (60) days of the equipment's In-Service date. Wear items are excluded from warranty coverage.

All OEM service parts sold by Heil have a six (6) month warranty from the date of purchase. Aftermarket parts purchased from Heil are supported by a 90-day warranty. The parts warranty covers parts only, providing that factory inspection reveals a defect in material or workmanship. Labor, troubleshooting, equipment downtime, etc. is not covered under the parts warranty policy.

HEIL MAKES NO OTHER WARRANTY, EXPRESSED OR IMPLIED, AND MAKES NO WARRANTY OF MERCHANTABILITY OR OF FITNESS FOR ANY PARTICULAR PURPOSE. HEIL DOES NOT ASSUME ANY LIABILITY OR ACCEPT CLAIMS FOR LOSS OF PROFITS, PRODUCT DOWN TIME OR ANY OTHER DIRECT, INCIDENTAL OR INDIRECT CONSEQUENTIAL LOSSES, COSTS, DAMAGES OR DELAYS.

Any improper use, operation beyond rated equipment or component capacity, substitution of parts that are not Heil-approved, or any alteration or repair by others in such a manner as in Heil's sole judgment affect the product operation or integrity shall void the warranty.

Other than the extension of the standard warranty period purchased under a supplemental Heil Extended Warranty Program, no employee or representative is authorized to modify this warranty in any way nor shall any other warranties be granted. No dealersupplied warranty program is endorsed or supported by Heil.

Heil retains the right to modify its factory warranty program prospectively at any time.

The statements included herein is merely a summary of the full Limited Warranty provided by Heil. Please see the full limited warranty as outlined at https://www.heil.com/warranty/ under Heil Warranty Policies and Procedures.

Revised 6/2024

WE NEVER STOP WORKING FOR YOU

Customer Service & Repair Parts Contact

www.heil.com

Customer Care:
866-ASK-HEIL
(866-275-4345)

The Heil Co.
4301 Gault Avenue North
Fort Payne, AL 35967-9984

Parts Central:

800-528-5308

Technical Service:

866-310-4345

Techsupport@Heil.com